ROYALOHM

C O N F I D E N T I A L D O C U M E N T

SPECIFICATION FOR APPROVAL

Distributed by Conrad Electronic SE, Hirschau, Germany

CONRAD

Description : High Power Thick Film Chip Resistors

Royalohm Part no.:

HP03W5xxxxxT5E	(HP03 1/5W (0603) +/- 1% & 5%)
HP05W3xxxxxT5E	(HP05 1/3W (0805) +/- 1% & 5%)
HP06W2xxxxxT5E	(HP06 1/2W (1206) +/- 1% & 5%)

Approved by

Parts corresponding to RoHS Compliant: 2005-Apr.-1

Royal Electronic Factory (Thailand) Co., Ltd.
20/1-2 Moo 2 Klong-Na, Muang
Chachoengsao 24000, Thailand
Tel: +66-38-822404-8
Fax: +66 38-981190 / 823765
E-mail Address: Export sales: Export@royalohm.com
Local sales: Local@royalohm.com
http:// www.royalohm.com
P.O. Box 251 Klongchan, Bangkok 10240, Thailand

Approved	Checked	Prepared
Mr. Jack Lin	Mr. S. Polthanasan	Ms. P. Supatta

Issue Date: 2015/03/28

CHANGE NOTIFICATION HISTORY			
Version	**Date of Version**	**History**	**Remark**
1	2015/03/28	HP (0603, 0805, 1206) Series	
		Resistance tolerance: ±1% & ±5%)	

Customer: CONRAD	Part. No.: HPxxxxxxxxxT5E

1. Scope:

This specification for approval relates to High Power Thick Film Chip Resistors manufactured by ROYALOHM 's specifications.

2. Type designation:

The type designation shall be in the following form:

Ex.

Type	Power Rating	Resistance tolerance	Nominal Resistance
HP03	1/5W (0.20W)	F,J	10Ω
HP05	1/3W (0.33W)		
HP06	1/2W (0.50W)		

3. Ratings:

Type	HP03	HP05	HP06
Power Rating	1/5W (0.20W)	1/3W (0.33W)	1/2W (0.50W)
Max. Working Voltage	50 V	150 V	200 V
Max. Overload Voltage	100 V	300 V	400 V
Dielectric Withstanding Voltage	300 V	500 V	500 V
Temperature Range	-55℃～+155℃		
Ambient Temperature	70 ℃		

3.1 Power rating:

Resistors shall have a power rating based on continuous load operation at an ambient temperature of 70 ℃ . For temperature in excess of 70 ℃ , The load shall be derate as shown in figure 1.

Figure 1

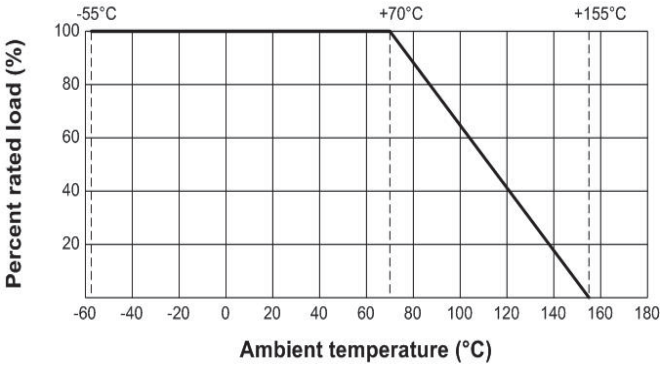

3.2 Voltage Rating:

Resistors shall have a rated direct-current (DC) continuous working voltage or an approximate sine-wave root-mean-square (RMS) alternating-current (AC) continuous working voltage at commercial-line frequency and waveform curresponding to the power rating , as determined from the following formula :

$$RCWV = \sqrt{P \times R}$$

Were : RCWV = Rated DC or RMS AC continuous working voltage at commercial-line frequency and waveform (volt)

P = Power Rating (watt)

R = Nominal Resistance (ohm)

In no case shall the rated DC or RMS AC continuous working voltage be greater than the applicable maximum value.

High Power Thick Film Chip Resistors

4. Construction :

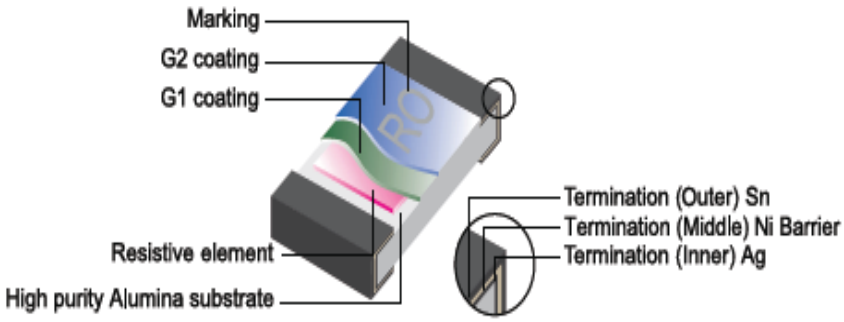

5. Power rating and dimensions

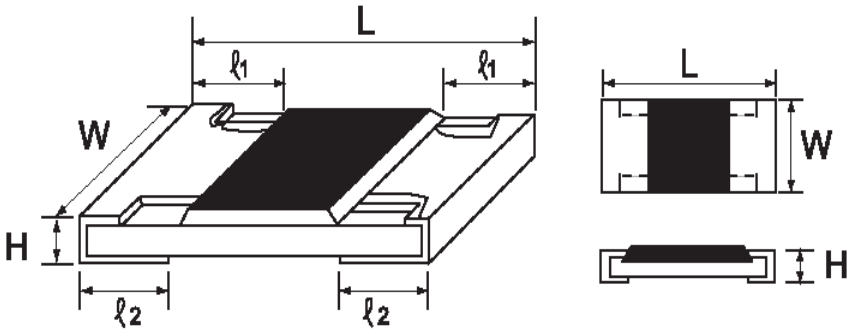

Dimension :

Type	Dimension (mm)				
	L	W	H	ℓ1	ℓ2
HP03	1.60 ± 0.10	0.80 + 0.15 - 0.10	0.45 ± 0.10	0.30 ± 0.20	0.30 ± 0.20
HP05	2.00 ± 0.15	1.25 + 0.15 - 0.10	0.55 ± 0.10	0.40 ± 0.20	0.40 ± 0.20
HP06	3.10 ± 0.15	1.55 + 0.15 - 0.10	0.55 ± 0.10	0.45 ± 0.20	0.45 ± 0.20

Power Rating :

Type	Power Rating at 70 ℃	Tolerance %	Resistance Range	Standard Series
HP03	1/5W (0.20W)	± 1	1Ω ~ 10MΩ	E-96
		± 5	1Ω ~ 10MΩ	E-24
HP05	1/3W (0.33W)	± 1	1Ω ~ 10MΩ	E-96
		± 5	1Ω ~ 10MΩ	E-24
HP06	1/2W (0.50W)	± 1	1Ω ~ 10MΩ	E-96
		± 5	1Ω ~ 10MΩ	E-24

6. Marking :

6.1 Resistors

A. ± 5% Tolerance 0603, 0805, 1206 : the first two digits are significant figures of resistance and the third onedenoted number of zeros.

Ex. | | 333 | | 33KΩ

B. For ohmic values below 10 Ω

Ex. | | 2R2 | | 2.2Ω

C. For E-96 series [±1% (F) tolerance] in 0603 size 3 digit system (due to space restrictions) please refer to page 8 for coding formula

Ex. | | 02C | | 10.2KΩ

D. ±1% Tolerance 0805, 1206 : 4 Digits, the first three digits are singnificant figures of resistance and the fourth digit denoted number of zeros.Letter"R" is for decimal point.

Ex. | | 2701 | | 2.7KΩ

6.2 Labels

Label shall be marked with the following item :

Label shall be marked with the following item :

A. Nominal Resistance and Resistance Tolerance

B. Power Rating and Size

C. Quantity

D. Part No.

E. P.O.No.

F. Lot No.

Ex.

ROYALOHM

CHIP RESISTOR

RESISTANCE: **10** Ω ± **5** %

WATTAGE: **1/2W** SIZE: **HP06**

QUANTITY: **5,000** PCS **Pb-Free**

PART NO.:

P.O.NO.:

LOT NO. : **825723** **HP06W2J0100T5E**

Remark : **For 1206** ± 5 % : Label is 10E, value is 10Ω, marking is 100

High Power Thick Film Chip Resistors

Mutiplier Code :

Code	A	B	C	D	E	F	G	H	X	Y	Z
Multiplier	10^{0}	10^{1}	10^{2}	10^{3}	10^{4}	10^{5}	10^{6}	10^{7}	10^{-1}	10^{-2}	10^{-3}

Coding

XX

Resistance Code

Formula

X

Multiplier Code

Example :

10.2KΩ = 102 X 10^{2} Ω = 02C

102 → 02, 10^{2} → C

33.2Ω = 332 X 10^{-1} Ω = 51X

332 → 51, 10^{-1} → X

Value	Code	Value	Code	Value	Code	Value	Code	Value	Code
100	**01**	162	**21**	261	**41**	422	**61**	681	**81**
102	**02**	165	**22**	267	**42**	432	**62**	698	**82**
105	**03**	169	**23**	274	**43**	442	**63**	715	**83**
107	**04**	174	**24**	280	**44**	453	**64**	732	**84**
110	**05**	178	**25**	287	**45**	464	**65**	750	**85**
113	**06**	182	**26**	294	**46**	475	**66**	768	**86**
115	**07**	187	**27**	301	**47**	487	**67**	787	**87**
118	**08**	191	**28**	309	**48**	499	**68**	806	**88**
121	**09**	196	**29**	316	**49**	511	**69**	825	**89**
124	**10**	200	**30**	324	**50**	523	**70**	845	**90**
127	**11**	205	**31**	332	**51**	536	**71**	866	**91**
130	**12**	210	**32**	340	**52**	549	**72**	887	**92**
133	**13**	215	**33**	348	**53**	562	**73**	909	**93**
137	**14**	221	**34**	357	**54**	576	**74**	931	**94**
140	**15**	226	**35**	365	**55**	590	**75**	953	**95**
143	**16**	232	**36**	374	**56**	604	**76**	976	**96**
147	**17**	237	**37**	383	**57**	619	**77**		
150	**18**	243	**38**	392	**58**	634	**78**		
154	**19**	249	**39**	402	**59**	649	**79**		
158	**20**	255	**40**	412	**60**	665	**80**		

*Marking for 0603 E-96 series, the resistance value that no have multiplier code indicate marking follow this:
The first two digits are significant figures of resistance and the third one denoted number of zeros and under line the marking letters.

Ex.

	<u>100</u>	

10Ω

High Power Thick Film Chip Resistors

7. Performance specification :

Characteristics	Limits	Test Methods (JIS C 5201-1)
Dielectric withstanding voltage	No evidence of flashover mechanical damage, arcing or insulation break down	4.7 Clamped in the trough of a 90℃ metallic v-block and shall be tested at ac potential respectively specified in the type for 60-70 seconds
Temperature Coefficient	1Ω~10Ω ≤± 200PPM/℃ 11Ω~10MΩ ≤± 100PPM/℃	4.8 Natural resistance change per temp. degree centigrade. $\frac{R2-R1}{R1(t2-t1)} \times 10^6$ (PPM/℃) R1: Resistance value at room temperature (T1) R2: Resistance value at room temp. plus 100 ℃(T2) Test pattern: room temp. (T1), room temp. +100℃(T2)
Short time overload	Resistance change rate is ± 5% (2.0% + 0.1Ω) Max. ± 1% (1.0% + 0.1Ω) Max.	4.13 Permanent resistance change after the application of a potential of 2.5 times RCWV for 5 seconds
Solderability	95 % coverage Min.	Wave Solder: Test temperature of solder: 245°C ±3°C dipping time in solder : 2-3 seconds. Refolw: 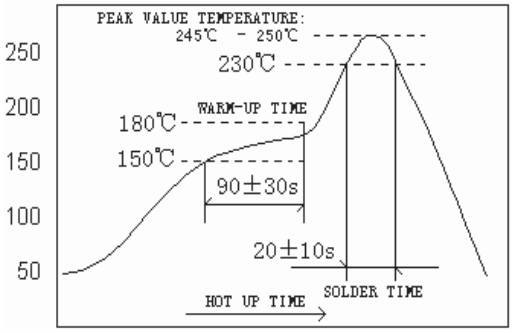
Soldering heat	Resistance change rate is: ± (1.0%+0.05Ω) Max.	4.18 Dip the resistor into a solder bath having a temperature of 260°C±3°C and hold it for 10±1 seconds.
Temperature cycling	Resistance change rate is ± 5% (1.0% + 0.05Ω) Max. ± 1% (0.5% + 0.05Ω) Max.	4.19 Resistance change after continuous 5 cycles for duty cycle specified below :

Step	Temperature	Time
1	-55℃ ± 3℃	30 mins
2	Room temp.	10～15 mins
3	+155℃ ± 2℃	30 mins
4	Room temp.	10～15 mins

High Power Thick Film Chip Resistors

7. Performance specification :

Characteristics	Limits	Test Methods (JIS C 5201-1)
Humidity	Resistance change rate is ± 5% (3.0% + 0.1Ω) Max. ± 1% (0.5% + 0.1Ω) Max.	4.24 Temporary resistance change after 240 hours exposure in a humidity test chamber controlled at 40±2°C and 90-95% relative humidity
Load life in humidity	Resistance change rate is ± 5% (3.0% + 0.1Ω) Max. ± 1% (1.0% + 0.1Ω) Max.	7.9 Resistance change after 1,000 hours (1.5 hours "on", 0.5 hour "off") at RCWV in a humidity chamber controlled at 40℃ ± 2℃ and 90 to 95 % relative humidity
Load Life	Resistance change rate is ± 5% (3.0% + 0.1Ω) Max. ± 1% (1.0% + 0.1Ω) Max.	4.25.1 Permanent resistance change after 1,000 hours operating at RCWV, with duty cycle of (1.5 hours"on", 0.5 hour"off") at 70℃ ± 2℃ ambient
Terminal bending	Resistance change rate is ± (1.0% + 0.05Ω) Max.	4.33 Twist of Test Board : Y/X = 3/90 mm for 60 seconds

8. Packing specification :

8.1 Taping Dimension (mm)

A. Paper taping

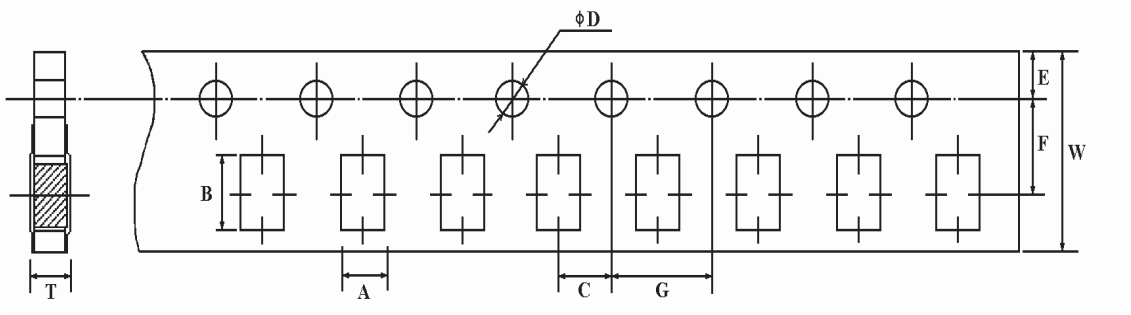

Type	A ± 0.2	B ± 0.2	C ± 0.05	ϕD +0.1 - 0	E ± 0.1	F ± 0.05	G ± 0.1	W ± 0.2	T ± 0.1
HP03	1.10	1.90	2.0	1.5	1.75	3.5	4.0	8.0	0.67
HP05	1.65	2.40	2.0	1.5	1.75	3.5	4.0	8.0	0.81
HP06	2.00	3.60	2.0	1.5	1.75	3.5	4.0	8.0	0.81

* Peeling Strength of Top Cover Tape

Test Condition: 0.1 to 0.7 N at a peel-off speed of 300 mm / min.

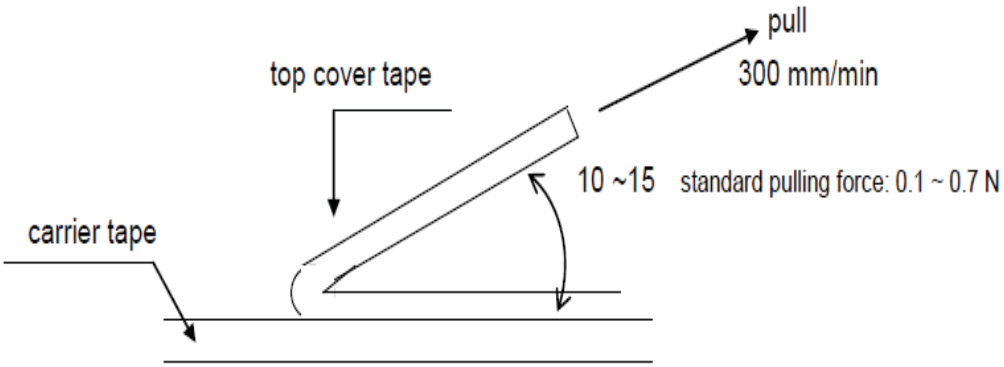

High Power Thick Film Chip Resistors

8.2 Reel Dimension (mm)

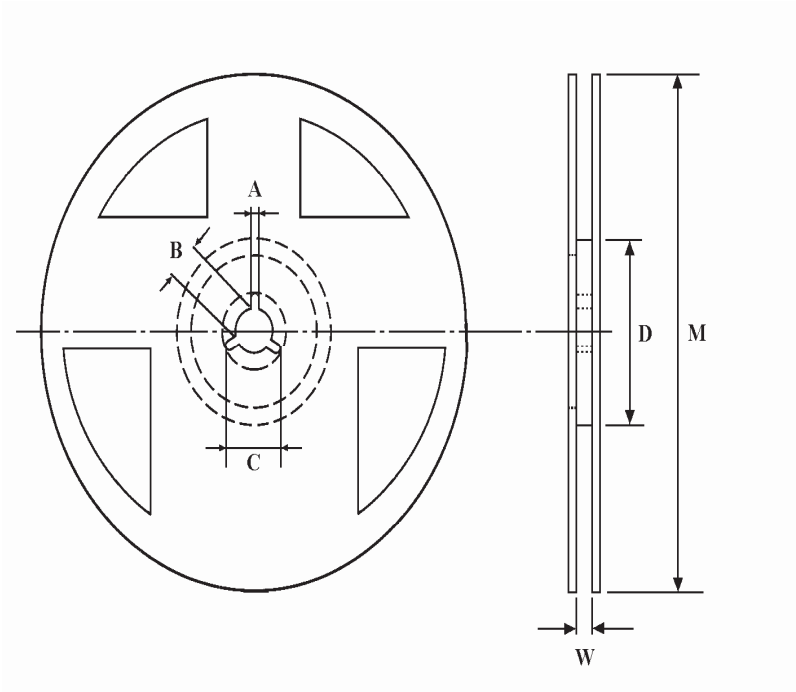

Type	Packaging	Quantity Per Reel	A ± 0.5	B ± 0.5	C ± 0.5	D ± 1	M ± 2	W ± 1
HP03	Paper	5,000 pcs.	2	13	21	60	178	10
HP05	Paper	5,000 pcs.	2	13	21	60	178	10
HP06	Paper	5,000 pcs.	2	13	21	60	178	10

Remark : φ M 10,000pcs. / Reel = 255 ± 2mm
20,000pcs. / Reel = 330 ± 2mm

Part Number System

Explanation of Part Number System

High Power Thick Film Chip Resistors

1	2	3	4	5	6	7	8	9	10	11	12	13	14
H	P	0	3	W	5	J	0	1	0	0	T	5	E

Product Type:
Fill-in these 4 digits with the Thick Film High Power Chip resistor types as follows:
HP02:0402
HP03:0603
HP05:0805
HP06:1206
HP10:2010
HP12:2512

Wattage:
Fill-in these 2 digits with the codes as follows:
Normal size:
WA = 1/10W
W5 = 1/5W
W3 = 1/3W
W2 = 1/2W
1W = 1W
2W = 2W

Tolerance:
F ~ ± 1%
J ~ ± 5%

Resistance Value:
1. E-24 series: the 1st digit is "0", the 2nd & 3rd digits are for the significant figures of the resistance and the 4th indicate the number of zeros following;
2. E-96 series: the 1st to 3rd digits are for the significant figures of the resistance and the 4th digit indicate the number of zeros following.
Decimal point is expressed :
"J"~ 0.1,**"K"**~0.01,**"L"**~0.001
Ex: 2Ω26 ~226K, 226Ω ~2260

Packing Quantity:
1 = 1,000pcs
2 = 2,000pcs
3 = 3,000pcs
4 = 4,000pcs
5 = 5,000pcs
A = 500pcs
B = 2,500pcs
C = 10,000pcs
D = 20,000pcs
G = 25,000pcs
H = 50,000pcs

Packing Type:
T = T/R Packing
B = Bulk in Poly-bag
C = Bulk in cassette

Special Feature:
0 = NIL
E = Lead Free

Sample :	HP03	1/5W	(0603)	+/- 5%	10Ω	T/R--5,000	→	HP03W5J0100T5E
	HP05	1/3W	(0805)	+/- 5%	10Ω	T/R--5,000	→	HP05W3J0100T5E
	HP06	1/2W	(1206)	+/- 5%	10Ω	T/R--5,000	→	HP06W2J0100T5E

High Power Thick Film Chip Resistors

Environment Related Substance

This product complies to EU RoHS directive, EU PAHs directive, EU PFOS directive and Halogen free.

Ozone layer depleting substances.

Ozone depleting substances are not used in our manufacturing process of this product.
This product is not manufactured using Chloro fluorocarbons (CFCs), Hydrochlorofluorocarbons (HCFCs), Hydrobromofluorocarbons (HBFCs) or other ozone depleting substances in any phase of the manufacturing process.

Storage Condition

The performance of these products, including the solderability, is guaranteed for a year from the date of arrival at your company, provided that they remain packed as they were when delivered and stored at a temperature of 25°C ± 5°C and a relative humidity of 60%RH ± 10%RH

Even within the above guarantee periods, do not store these products in the following conditions. Otherwise, their electrical performance and/or solderability may be deteriorated, and the packaging materials (e.g. taping materials) may be deformed or deteriorated, resulting in mounting failures.

1. In salty air or in air with a high concentration of corrosive gas, such as Cl_2, H_2S, NH_3, SO_2, or NO_2
2. In direct sunlight