Copyright FCI.

PRODUCT NO	NUMBER OF POS.	LOADED POSITION	LEAD FREE OPTION	COLOR
92250-X88	8	ALL POS.	NOTE 6 & 8	BLACK
92250-X86		2,3,4,5,6,7		
92250-X84		3,4,5,6		
92250-X88G		ALL POS.		GRAY

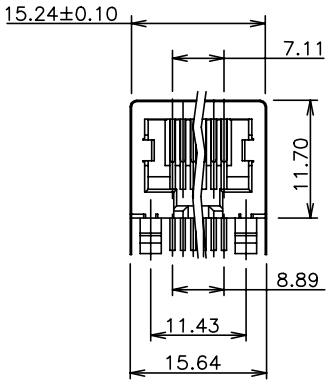

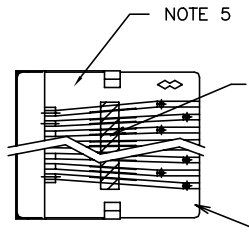

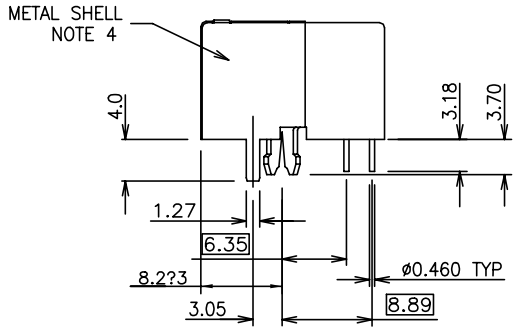

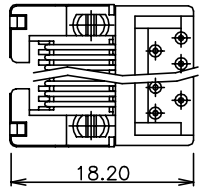

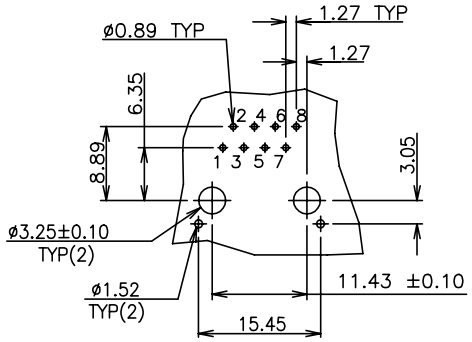

P.C.B. HOLE PATTERN VIEWED FROM TOP.

NOTE: PLEASE CHECK FOR AVAILABILITY,NOT ALL OPTIONS AVAILABLE.

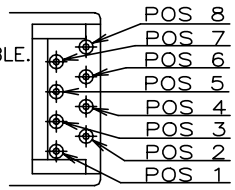

POS. NO. CONFIGURATION

PLATING CODE X	PLATING	
0	5u" Au + high performance lubricant	
1	15u" GXT	⑩
3	5u" Au + high performance lubricant	⑩
5	50u" GXT	

NOTE: PLEASE CHECK FOR AVAILABILITY,NOT ALL OPTIONS AVAILABLE.

NOTES:

1. RECOMMENDED P.C.B THICKNESS 1.60 MM
2. HOUSING MAT'L: NYLON 6/6, 25% GLASS REINFORCED,
3. CONTACTS: PHOS BRONZE ALLOY UNS-C51000, ø 0.460 ROUND WIRE, PLATING SEE TABLE.
4. SHIELDING MATERIAL:
   0.25 [0.010] THICK BRASS ALLOY 2.54磁/100?
   TIN-LEAD PLATED, OVER 1.02磁/40? MIN NICKEL UNDERPLATING
   PER BUS-15-002/M.
   LEAD FREE OPTION:
   0.25 [0.010] THICK BRASS ALLOY 2.03磁/80?
   TIN PLATED, OVER 1.02磁/40? MIN NICKEL UNDERPLATING
   PER BUS-15-002/M.
5. COMPANY LOGO LOCATED IN THIS AREA.
6. ADD LF SUFFIX AT THE END OF PART NUMBER FOR LEAD FREE OPTION.
7. THE HOUSING WILL WITHSTAND EXPOSURE TO 260癈 PEAK TEMPERATURE FOR 15 SECONDS IN A WAVE SOLDER APPLICATION WITH A 1.5mm MINIMUM THICK CIRCUIT BOARD. SEE APPLICATION NOTES/PROCEDURES IF THEY ARE AVAILABLE.
8. THIS PRODUCT MEETS EUROPEAN UNION DIRECTIVES AND OTHER COUNTRY REGULATION AS DESCRIBED IN GS-22-008.
9. PLATING OPTIONS:
   MAY BE EITHER GOLD OR GXT PLATED AT MANUFACTURER'S OPTION.
10. EQUIVALENT THICKNESS Au AND GXT PLATING HAVE SAME FUNCTION AND THEY ARE ALTERNATIVE BY THE CUSTOEMR .

ltr	ecn	nodr	date
K	N06-256	WG	12/05/06
L	N08-0097	SH	09/24/08
M	ELX-N-010686	SH MAO	3/14/12

mat'l. code

surface √ ISO1302 tolerance ISO1101 ISO406

projection

product family: MOD JACK

tolerances unless otherwise specified

angle 0°±2° linear 0.X±0.3, 0.XX±0.15, 0.XXX±0.05

mm

scale 1.0

title: LOW PROFILE PCB III 8 POS SHIELDED M/J

dr	K.CHEN	6/27/92
engr	TONY CHEN	6/27/92
chr	TONY CHEN	6/27/92
appd	JENN TSAO	6/27/92

dwg no 92250 sheet 1 of 1 size A4

type Product Customer Drawing

sheet index | revision M | sheet 1