RoHS Compliant

REVISION			
REV	DESCRIPTION	DATE	SIGNATURE
A	Initial release	2015.10.27	GINO

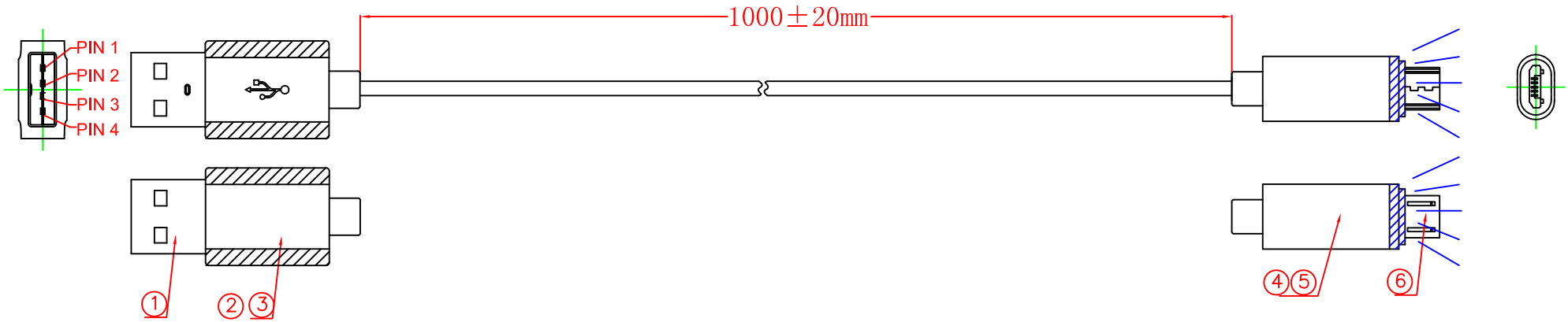

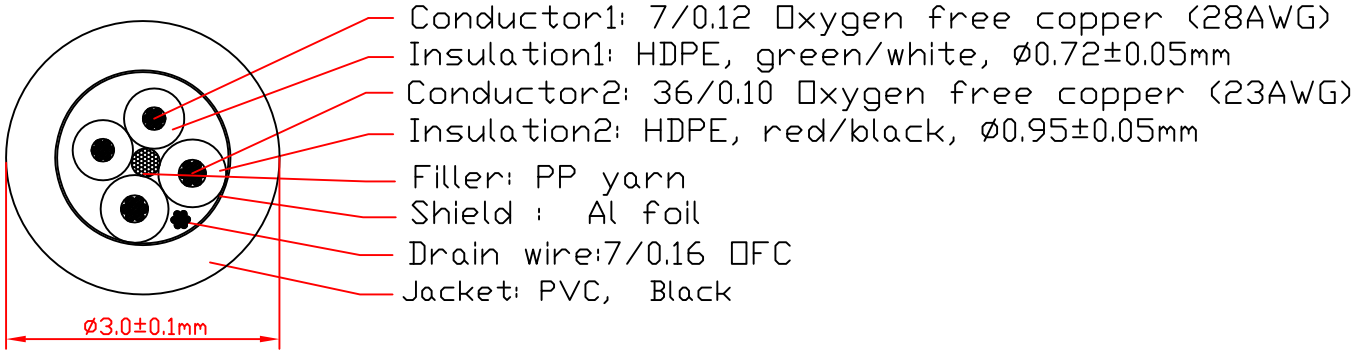

Cable construction

No	PART No.	COMPONENTS	QTY	MATERIAL	FINISH
⑥	---	Micro B Connector	1	Iron	Nickel plated
⑤	S170-002B	Micro B Outer Molding	1	PVC	Black
④	S170-002A	Micro B Inner Molding	1	PVC	transparent
③	S00-106B	USB Outer Molding	1	PVC	Black
②	S00-106A	USB Inner Molding	1	PE	transparent
①	311-016-1	USB A(M) Connector	1	Iron	Nickel plated

TITLE	DRAWING No.	SHEET
USB A - MICRO B+LED (Faster chargen)		1 /1

UNIT	SCALE	TOL UNLESS NOTED	APPROVED BY	CHECKED BY	DRAWN BY
mm	Free	±0.1			GINO
					2015.10.27