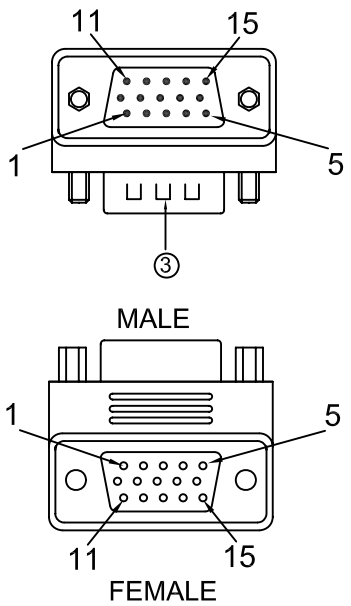

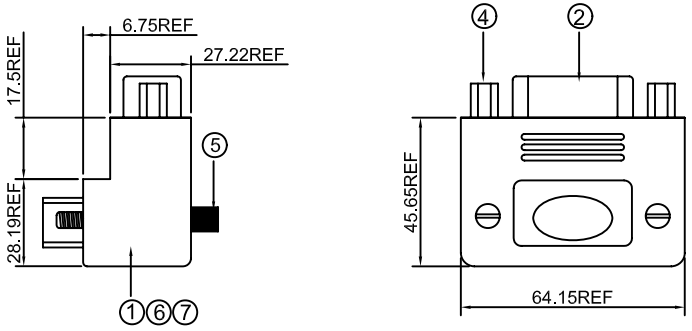

PIN OUT:

HDB15P M	1	2	3 ------ 14	15	SHELL
HDB15P F	1	2	3 ------ 14	15	SHELL

⑦	OUTER MOLD	BLACK PVC 45 P	15g
⑥	INNER MOLD	PE	10g
⑤	SCREW	METAL SCREW,#4-40NUC,6.0*28mm,NICKEL PLATED.	2PCS
④	NUT	METAL HEXIGAN NUT,#4-40NUC,NICKEL PLATED	2PCS
③	CONNECTOR	HDB15P MALE,GOLD PLATED CONTACT AND NICKEL PLATED SHELL,BLUE INSULATOR	1PCS
②	CONNECTOR	HDB15P FEMALE,GOLD PLATED CONTACT AND NICKEL PLATED SHELL,BLUE INSULATOR	1PCS
①	WIRE	UL1007 28AWG,	16PCS
No.		Description	Qty

OPEN/SHORT TEST: 100% TEST.

INSULATION: MIN. 5M.

RoHS COMPLIANT

Company	CONRAD	Goods Code	29039C100	Draw	FC065	Date		C		
ITEM NO.		Drawing Evidence		Check		Date		B		
Goods NO.								A		
Original NO.		Unit(mm)		Approval		Date			REVISE	Date