Customer:

Type	Off Temp. (℃)	On Temp. (℃)	Contact State	Obtained standard and Electrical parameters	Remark
T3/33-150/135/A143B64	150±5	135±7	N.C	UL 250V~10A (E202192) TuV 250V~10A (R50099855)	

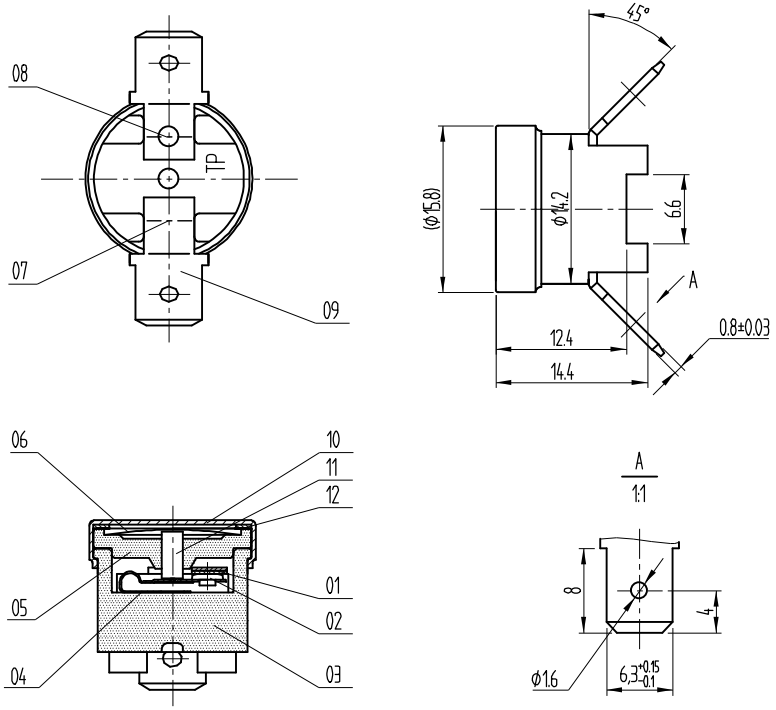

Marking:

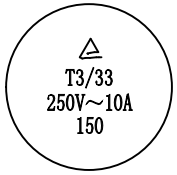

Specification

1. Standards According:GB14536.1-2008, GB14536.10-2008, GB/T22687-2008, UL873, EN60730-1,EN60730-2-9;
2. Resistance between terminals:below 50mΩ at DC5V/0.25A (initial figure);
3. Insulated resistance:above 100MΩ with DC500V between terminals and cap ;
4. Dielectric strength: AC1500V for 1 minute between terminals and cap without breakdown ;
5. Heat resistant: 230℃;
6. The product meet with the orders of 2011/65/EU RoHS and the orders of 1907/2006/EC REACH;
7. Packing: 1 box=2000pcs=100pcs×20Bags, Box size: 470×340×220mm;
   1 box=2000pcs=400pcs×5 box, Box size: 470×340×220mm.
8. the measurements no marking toletance,chose the free tolerance from below table.

free tolerance table

measurement range	0~9	9.1~16	16.1~30	>30
tolerance value	±0.2	±0.3	±0.4	±0.5

No.	Parts Name	Qty.	Material	Remark
12	Gasket	1	Aluminium	
11	Actuator Pin	1	Ceramic	
10	Cap	1	Aluminium	
09	Terminal	2	Steel	Nickel plated
08	Long Rivet	1	Steel	Tin plated
07	Short Rivet	1	Steel	Tin plated
06	Bimetal Disc	1	Bimetal	
05	Top Cover	1	EC	
04	Movable arm	1	Alloy copper	
03	Case	1	EC	
02	Movable Contact	1	AgNi/Cu(T2)	
01	Stationary Contact plate	1	AgNi/Cu(H65)	

Mark	Qty.	Content	Signature

Snap Action Thermostat

SN: 20151102-S7

Sample	Qty.	Weight	Proportion

Designed	
Reviewed	
Approved	

T3/33

Page 1 of 1 Page

Foshan Tianpeng Thermostats Co., Ltd.

Old No.

Base No.

Signature