Paulmann

Safety Instructions

0, 1, 4, 6, 7, 8, 11, 15, 16, 17, 19, 22, 28,

Info Hotline

+49 (0) 5041 998 389
Mon. - Do. 7⁰⁰ - 20⁰⁰
Fr. 7⁰⁰ - 17⁰⁰

Paulmann Licht GmbH
Quezinger Feld 2
31832 Springe
Germany

www.paulmann.com
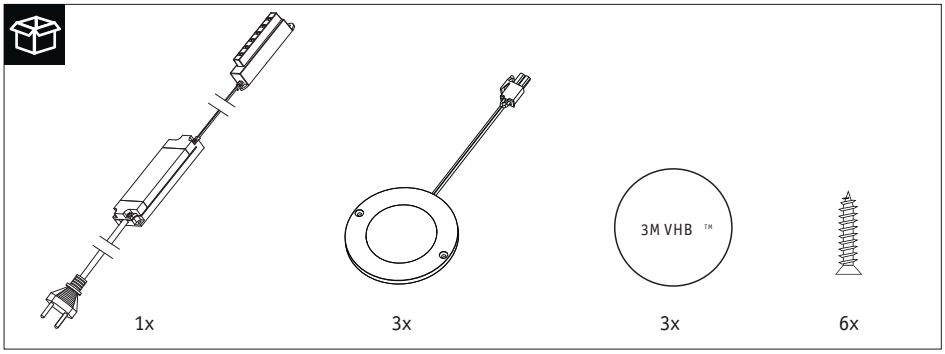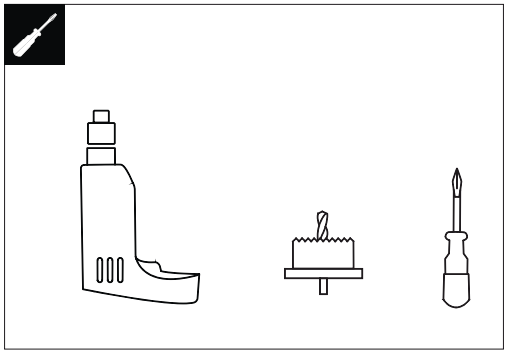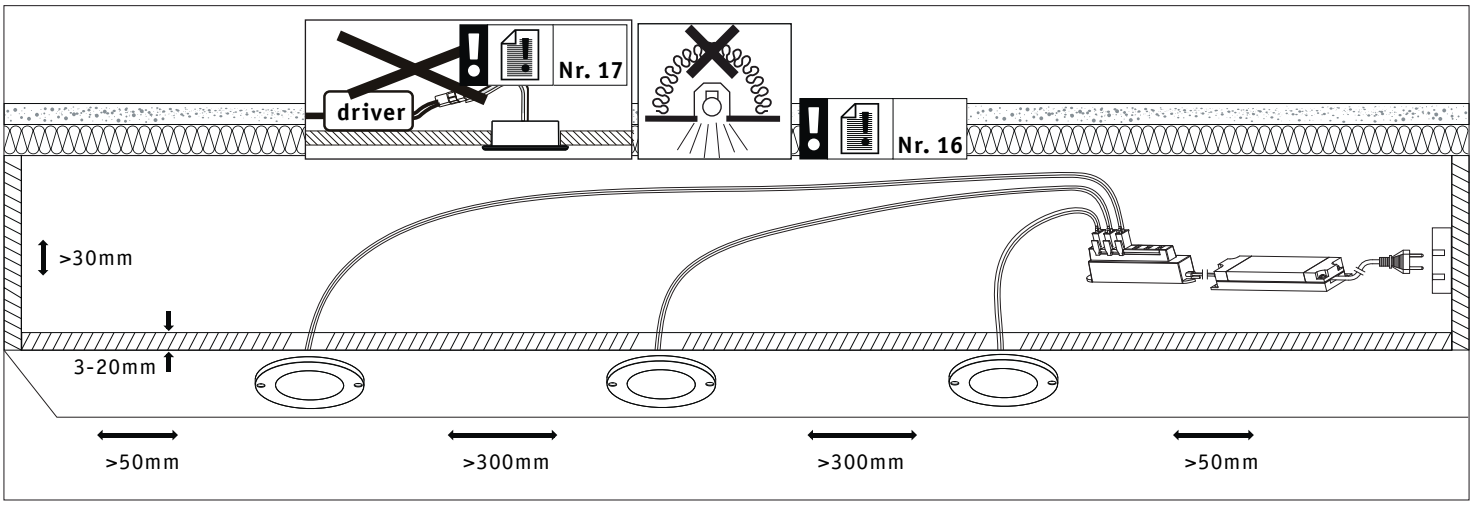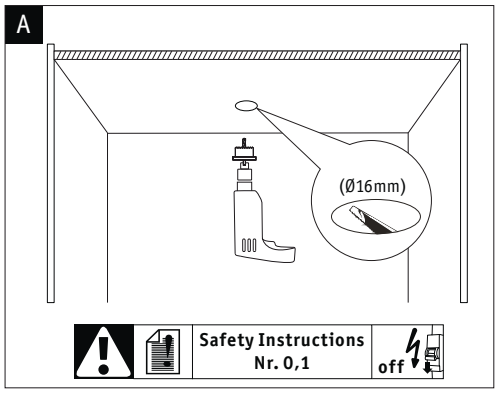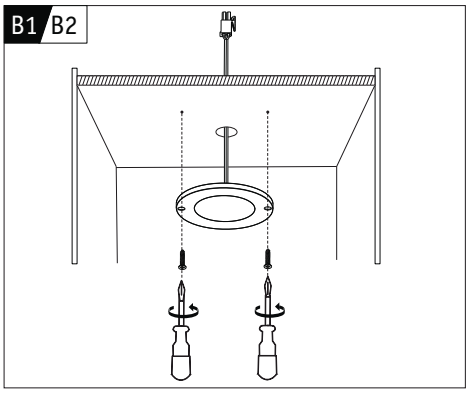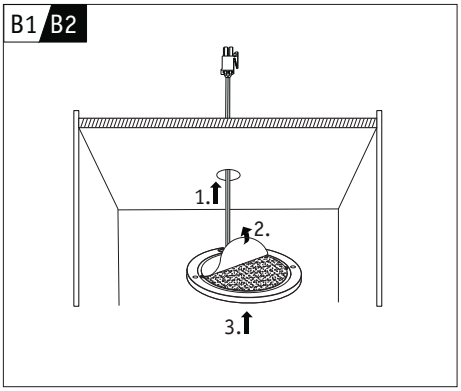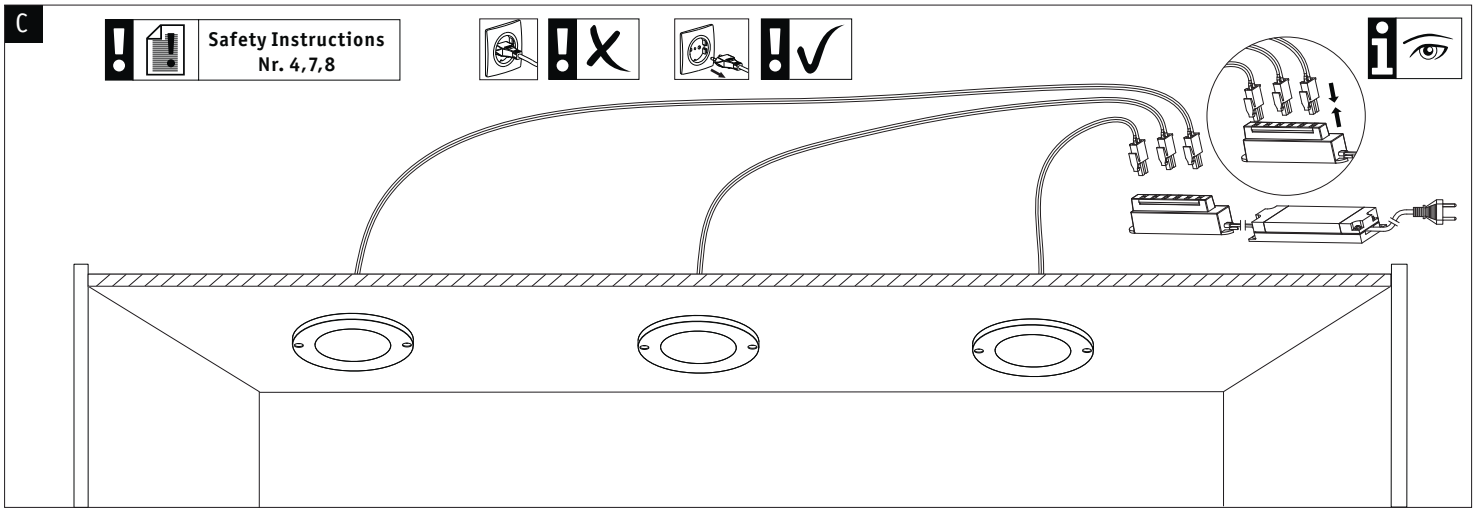
Art.-Nr.: **935.62** (+MA 173) PLUL 11/15