# OMNIMATE Signal - series BL/SL 2.50
# SL 2.50/09/90G 3.2SN BK BX

**Weidmüller Interface GmbH & Co. KG**
Klingenbergstraße 16
D-32758 Detmold
Germany
Fon: +49 5231 1429-0
Fax: +49 5231 14292083
www.weidmueller.com



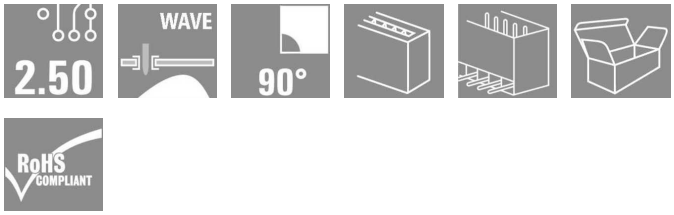


Male header for wave soldering in 2.50 mm pitch.
- Plugging direction is parallel (90°) to the PCB
- Housing variant: Closed (G)
- Packaged in a cardboard box (BX)

## General ordering data

| | |
|---|---|
| Type | SL 2.50/09/90G 3.2SN BK BX |
| Order No. | 2439820000 |
| Version | PCB plug-in connector, male header, THT solder connection, Pitch in mm (P): 2.50 mm, No. of poles: 9, 90°, Box |
| GTIN (EAN) | 4050118454994 |
| Qty. | 125 pc(s). |
| Product data | IEC: 320 V / 6 A<br>UL: 150 V / 5 A |
| Packaging | Box |

# OMNIMATE Signal - series BL/SL 2.50
# SL 2.50/09/90G 3.2SN BK BX

**Weidmüller Interface GmbH & Co. KG**
Klingenbergstraße 16
D-32758 Detmold
Germany
Fon: +49 5231 1429-0
Fax: +49 5231 14292083
www.weidmueller.com

## Technical data

### Dimensions and weights

| | |
|---|---|
| Net weight | 2.472 g |

### System specifications

| | | | |
|---|---|---|---|
| Product family | OMNIMATE Signal - series BL/SL 2.50 | Type of connection | Solder connection |
| Mounting onto the PCB | THT solder connection | Pitch in mm (P) | 2.5 mm |
| Pitch in inches (P) | 0.984 inch | Outgoing elbow | 90° |
| No. of poles | 9 | Number of solder pins per pole | 1 |
| Solder pin length (l) | 3.2 mm | Solder pin length tolerance | +0.1 / -0.1 mm |
| Tolerance of solder pin position | ± 0.1 mm | Solder pin dimensions | 0.8 x 0.8 mm |
| Solder pin dimensions = d tolerance | +0,02 / -0,02 mm | Solder eyelet hole diameter (D) | 1.3 mm |
| Solder eyelet hole diameter tolerance (D) | + 0,1 mm | L1 in mm | 20 mm |
| L1 in inches | 7.872 inch | Number of rows | 1 |
| Pin series quantity | 1 | Touch-safe protection acc. to DIN VDE 57 106 | Finger-safe plugged/ back-of-hand-safe unplugged |
| Touch-safe protection acc. to DIN VDE 0470 | IP 00 | Plugging cycles | 25 |
| Packaging | Box | | |

### Material data

| | | | |
|---|---|---|---|
| Insulating material | PA 66 | Colour | Black |
| Colour chart (similar) | RAL 9011 | CTI | ≥ 600 |
| UL 94 flammability rating | V-0 | Contact material | Cu-Leg |
| Contact surface | tinned | Tinning type | matt |
| Layer structure of solder connection | 1-3 µm Ni / 4-6 µm Sn matt | Operating temperature, min. | -40 °C |
| Operating temperature, max. | 105 °C | | |

### Rated data acc. to IEC

| | | | |
|---|---|---|---|
| tested acc. to standard | IEC 61984 | Rated current, min. no. of poles (Ta = 20°C) | 6 A |
| Rated current, min. no. of poles (Ta = 40°C) | 6 A | Rated voltage for surge voltage class / pollution degree II/2 | 320 V |
| Rated voltage for surge voltage class / pollution degree III/2 | 320 V | Rated voltage for surge voltage class / pollution degree III/3 | 80 V |
| Rated impulse voltage for surge voltage class/ pollution degree II/2 | 2.5 kV | Rated impulse voltage for surge voltage class/ pollution degree III/2 | 2.5 kV |
| Rated impulse voltage for surge voltage class/ contamination degree III/3 | 2.5 kV | | |

### Rated data acc. to CSA

| | | | |
|---|---|---|---|
| Rated voltage (Use group B) | 150 V | Rated current (use group B) | 5 A |

# OMNIMATE Signal - series BL/SL 2.50
# SL 2.50/09/90G 3.2SN BK BX

**Weidmüller Interface GmbH & Co. KG**
Klingenbergstraße 16
D-32758 Detmold
Germany
Fon: +49 5231 1429-0
Fax: +49 5231 14292083
www.weidmueller.com

## Technical data

### Rated data acc. to UL 1059

| | | | |
|---|---|---|---|
| Institute (cURus) | | Certificate No. (cURus) | E60693 |
| Rated voltage (use group B) | 150 V | Rated current (use group B) | 5 A |
| Reference to approval values | Specifications are maximum values, details - see approval certificate. | | |

### Classifications

| | | | |
|---|---|---|---|
| ETIM 6.0 | EC002637 | eClass 6.2 | 27-26-07-04 |
| eClass 9.1 | 27-44-04-02 | | |

### Notes

| | |
|---|---|
| Notes | • Rated current related to rated cross-section & min. No. of poles.<br>• P on drawing = pitch<br>• Rated data refer only to the component itself. Clearance and creepage distances to other components are to be designed in accordance with the relevant application standards. |
| IPC conformity | The products are developed, manufactured and delivered according to the internationally recognised IPC-A-610 standard, category "permissible". More extensive demands on the products can be evaluated on request. |

### Approvals

Approvals

### Downloads

| | |
|---|---|
| Safety notice | Safety indication |

# OMNIMATE Signal - series BL/SL 2.50
# SL 2.50/09/90G 3.2SN BK BX

**Weidmüller Interface GmbH & Co. KG**
Klingenbergstraße 16
D-32758 Detmold
Germany
Fon: +49 5231 1429-0
Fax: +49 5231 14292083
www.weidmueller.com

## Drawings

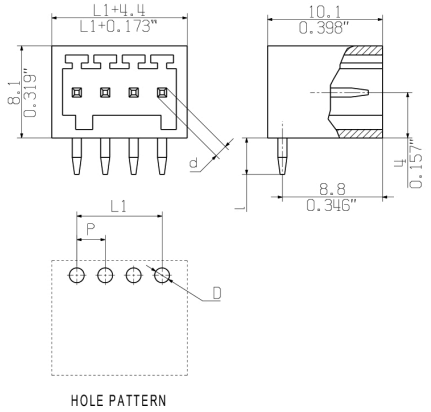


HOLE PATTERN