OMNIMATE Power - series LU
LUF 10.00/08/90 5.0SN BK BX

Weidmüller Interface GmbH & Co. KG
Klingenbergstraße 16
D-32758 Detmold
Germany
Fon: +49 5231 1429-0
Fax: +49 5231 14292083
www.weidmueller.com



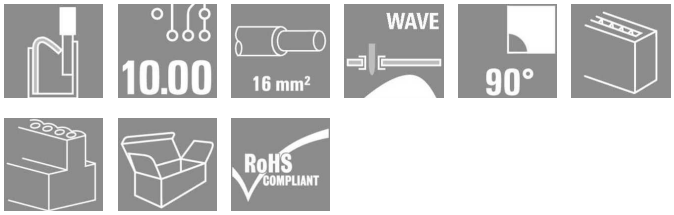

The sturdy, direct connection for extreme current and voltage requirements in all power electronics applications such as solar inverters, frequency converters, servo-controllers and power supplies.

General ordering data

Type	LUF 10.00/08/90 5.0SN BK BX
Order No.	1988660000
Version	PCB terminal, 10.00 mm, No. of poles: 8, 90°, Solder pin length (l): 5 mm, Black, PUSH IN, Clamping range, rated connection, max.: 16 mm², Box
GTIN (EAN)	4050118373264
Qty.	10 pc(s).
Product data	IEC: 1000 V / 76 A / 0.5 - 16 mm² UL: 300 V / 61 A
Packaging	Box

OMNIMATE Power - series LU
LUF 10.00/08/90 5.0SN BK BX

Weidmüller Interface GmbH & Co. KG
Klingenbergstraße 16
D-32758 Detmold
Germany
Fon: +49 5231 1429-0
Fax: +49 5231 14292083
www.weidmueller.com

Technical data

Dimensions and weights

Net weight	81.478 g

System parameters

Product family	OMNIMATE Power - series LU	Wire connection method	PUSH IN
Mounting onto the PCB	THT solder connection	Conductor outlet direction	90°
Pitch in mm (P)	10 mm	Pitch in inches (P)	0.394 inch
No. of poles	8	Solder pin length (l)	5 mm
Solder pin dimensions	d = 1.2 mm, Octagonal	Solder eyelet hole diameter (D)	1.6 mm
Solder eyelet hole diameter tolerance (D)	+ 0,1 mm	Number of solder pins per pole	4
Screwdriver blade	0.8 x 4.0	Stripping length	18 mm
L1 in mm	70 mm	L1 in inches	2.756 inch
Touch-safe protection acc. to DIN VDE 0470	IP20 plugged/ IP10 unplugged	Touch-safe protection acc. to DIN VDE 57 106	Safe from finger touch

Material data

Insulating material	Wemid (PA)	Colour	Black
Colour chart (similar)	RAL 9011	Insulating material group	I
CTI	≥ 600	Insulation resistance	≥ 10^8 Ω
UL 94 flammability rating	V-0	Contact material	E-Cu
Layer structure of solder connection	4-6 µm Sn matt	Storage temperature, min.	-25 °C
Storage temperature, max.	55 °C	Max. relative humidity during storage	80 %
Operating temperature, min.	-50 °C	Operating temperature, max.	120 °C
Temperature range, installation, min.	-25 °C	Temperature range, installation, max.	120 °C

Conductors suitable for connection

Clamping range, rated connection, min.	0.5 mm²	Clamping range, rated connection, max.	16 mm²
Wire connection cross section AWG, min.	AWG 18	Wire connection cross section AWG, max.	AWG 6
Solid, min. H05(07) V-U	0.5 mm²	Solid, max. H05(07) V-U	16 mm²
Stranded, min. H07V-R	6 mm²	Stranded, max. H07V-R	16 mm²
Flexible, min. H05(07) V-K	0.5 mm²	Flexible, max. H05(07) V-K	16 mm²
w. plastic collar ferrule, DIN 46228 pt 4, min.	0.5 mm²	w. plastic collar ferrule, DIN 46228 pt 4, max.	16 mm²
w. wire end ferrule, DIN 46228 pt 1, min	0.5 mm²	w. wire end ferrule, DIN 46228 pt 1, max.	16 mm²
Plug gauge acc. to EN 60999 a x b; Ø	5.3mm (B6)		

Rated data acc. to IEC

tested acc. to standard	IEC 60947-7-4	Rated current, min. no. of poles (Ta = 20°C)	76 A
Rated current, max. no. of poles (Ta = 20°C)	76 A	Rated current, min. no. of poles (Ta = 40°C)	76 A
Rated current, max. no. of poles (Ta = 40°C)	76 A	Rated voltage for surge voltage class / pollution degree II/2	1,000 V
Rated voltage for surge voltage class / pollution degree III/2	690 V	Rated voltage for surge voltage class / pollution degree III/3	630 V
Rated impulse voltage for surge voltage class/ pollution degree II/2	6 kV	Rated impulse voltage for surge voltage class/ pollution degree III/2	6 kV
Rated impulse voltage for surge voltage class/ contamination degree III/3	6 kV		

OMNIMATE Power - series LU
LUF 10.00/08/90 5.0SN BK BX

Weidmüller Interface GmbH & Co. KG
Klingenbergstraße 16
D-32758 Detmold
Germany
Fon: +49 5231 1429-0
Fax: +49 5231 14292083
www.weidmueller.com

Technical data

Rated data acc. to UL 1059

Institute (UR)		Certificate No. (UR)	E60693
Rated voltage (use group B)	300 V	Rated voltage (use group C)	150 V
Rated voltage (use group D)	600 V	Rated current (use group B)	61 A
Rated current (use group C)	61 A	Rated current (use group D)	5
Reference to approval values	Specifications are maximum values, details - see approval certificate.		

Classifications

ETIM 3.0	EC001284	ETIM 4.0	EC002643
ETIM 5.0	EC002643	ETIM 6.0	EC002643
eClass 6.2	27-26-11-01	eClass 9.1	27-44-04-01

Notes

Notes	• Additional colours on request • Rated current related to rated cross-section & min. No. of poles. • Wire end ferrule without plastic collar to DIN 46228/1 • Wire end ferrule with plastic collar to DIN 46228/4 • P on drawing = pitch • Rated data refer only to the component itself. Clearance and creepage distances to other components are to be designed in accordance with the relevant application standards. • The test point can only be used as potential-pickup point.
IPC conformity	The products are developed, manufactured and delivered according to the internationally recognised IPC-A-610 standard, category "permissible". More extensive demands on the products can be evaluated on request.

Approvals

Approvals	
ROHS	Conform

Downloads

Motion controllers white paper	Download Whitepaper

OMNIMATE Power - series LU
LUF 10.00/08/90 5.0SN BK BX

Weidmüller Interface GmbH & Co. KG
Klingenbergstraße 16
D-32758 Detmold
Germany
Fon: +49 5231 1429-0
Fax: +49 5231 14292083
www.weidmueller.com

Drawings

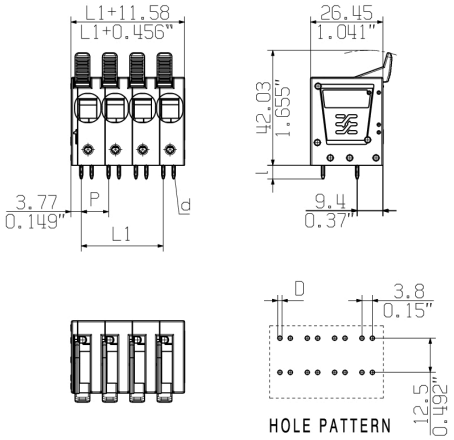

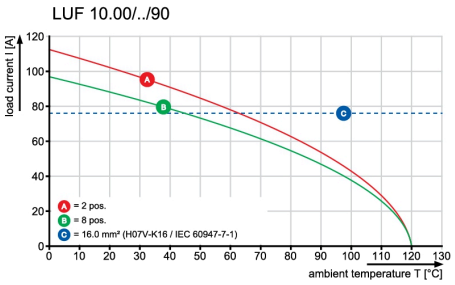

OMNIMATE Power - series LU
LUF 10.00/08/90 5.0SN BK BX

Weidmüller Interface GmbH & Co. KG
Klingenbergstraße 16
D-32758 Detmold
Germany
Fon: +49 5231 1429-0
Fax: +49 5231 14292083
www.weidmueller.com

Accessories

Slotted screwdriver



VDE insulated slot-head screwdriver, SDI DIN 7437, ISO 2380/2, drive output acc. to DIN 5264, ISO 2380/1. SoftFinish grip

General ordering data

Type	Order No.	Version	GTIN (EAN)	Qty.
SDIS 0.8X4.0X100	9008400000	Screwdriver, Blade width (B): 4 mm, Blade length: 100 mm, Blade thickness (A): 0.8 mm	4032248056361	1 pc(s).

Slotted screwdriver



Slotted screwdriver with rounded blade SD DIN 5265, ISO 2380/2, output to DIN 5264, ISO 2380/1. ChromTop tip, SoftFinish grip

General ordering data

Type	Order No.	Version	GTIN (EAN)	Qty.
SDS 0.8X4.0X100	9008340000	Screwdriver, Blade width (B): 4 mm, Blade length: 100 mm, Blade thickness (A): 0.8 mm	4032248056293	1 pc(s).

OMNIMATE Power - series LU
LUF 10.00/08/90 5.0SN BK BX

Weidmüller Interface GmbH & Co. KG
Klingenbergstraße 16
D-32758 Detmold
Germany
Fon: +49 5231 1429-0
Fax: +49 5231 14292083
www.weidmueller.com

Accessories

Additional accessories



No task is too small when creating the perfect solution.
Connections form just one part of the overall process. Small details are often the key to the perfect solution in applications where potentials are tested, grouped or even isolated.
A system is not a system without small but essential details:
- Test plugs ensure reliable pick-up from diagnostic sockets

In tandem with the manufacturing process and application.

General ordering data

Type	Order No.	Version	GTIN (EAN)	Qty.	Product data	Packaging
PS 2.0 MC	0310000000	PCB plug-in connector, Accessories, Test plug, Red, No. of poles: 1	4008190000059	20 pc(s).		Box