Item No. 1567715

Data Sheet

Crimp Cable Ferrules, Nylon Insulation 2.5 mm², Llight Blue, 100 pcs

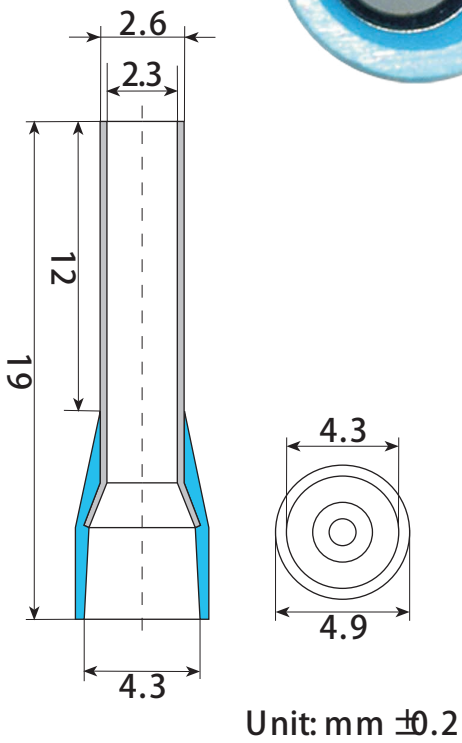

Technical data

Cross-section: 2.5 mm²
Sleeve length: 12 mm
Length: 19 mm
Insulation material: PVC
Contact material: Tin-plated copper
Color: Llight blue