Datasheet

Item no. 1571074, 1571158, 1570559

V1_06192018_01_en

Female Socket with 1 meter Cable + Panel Mount Pin Plug

Item no.: 1571074 (2 Pin) / 1571158 (3 Pin) / 1570559 (4 Pin)

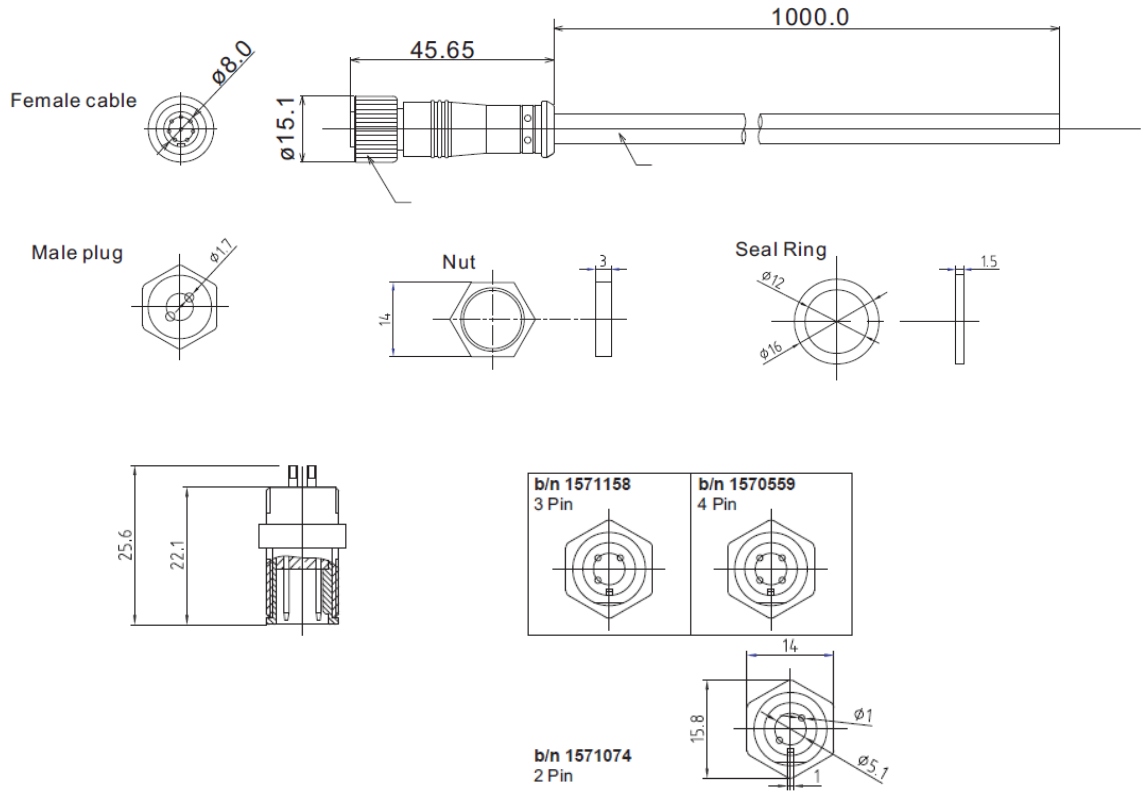

Operating Rating:	230V/ 7A
Insulation Resistance:	>1000 MΩ
Contact Resistance:	<5 MΩ
Dielectric Intensity:	AC 1000V at 1 minute
Wire Cross Section:	2 x 0.75mm² (2 Pin) / 3 x 0.75mm² (3 Pin) / 4 x 0.75 mm² (4 Pin)
IP:	IP68
Operating Temperature / Humidity:	-40°C to 125°C / 99%
Storage Temperature / Humidity:	-30°C to 120°C / 85%

This is a publication by Conrad Electronic SE, Klaus-Conrad-Str. 1, D-92240 Hirschau (www.conrad.com).
All rights including translation reserved. Reproduction by any method, e.g. photocopy, microfilming, or the capture in electronic data processing systems require the prior written approval by the editor. Reprinting, also in part, is prohibited. This publication represents the technical status at the time of printing.

© Copyright 2017 by Conrad Electronic SE.