Hybrid motor starter - ELR H3-IES-PT- 24DC/500AC-9 - 2903918

Please be informed that the data shown in this PDF Document is generated from our Online Catalog. Please find the complete data in the user's documentation. Our General Terms of Use for Downloads are valid
(http://download.phoenixcontact.com)

Hybrid motor starter for starting 3~ AC motors up to 500 V AC and 9 A output current, with 24 V DC control voltage, adjustable overload shutdown, emergency stop function to SIL 3/PL e, and push-in connection.

Your advantages

- 22.5 mm wide
- Safety level according to IEC 61508-1: SIL 3, ISO 13849: PL e
- Reduction in wiring
- Space saving
- Long service life
- 3-phase loop bridges
- Adjustable current for bimetal function
- Low-wear switching

Key commercial data

package_quantity	1
GTIN	4046356771412

Technical data

Note

Type of note	Notes on operation
Note	If this device is to be used in combination with the CrossPowerSystem power distribution board, the device mount for the 16 A fuse (order designation: EM-CPS-DA-22,5F/16A; order number: 1002668) is required in order to attach the hybrid motor starter to the power distribution board.

Device supply

Rated control circuit supply voltage U_S	24 V DC
Control supply voltage range	19.2 V DC ... 30 V DC
Rated control supply current I_S	40 mA
Type of protection	Surge protection
Type of protection	Reverse polarity protection

Input data

Input name	Control input
Rated actuating voltage U_C	24 V DC
Triggering voltage range	19.2 V DC ... 30 V DC

Hybrid motor starter - ELR H3-IES-PT- 24DC/500AC-9 - 2903918

Technical data

Input data

Rated actuating current I_C	5 mA (Input type 1)
Switching threshold	9.6 V (“0” signal)
Switching threshold	19.2 V (“1” signal)
Switching level	< 5 V DC (For EMERGENCY STOP)
Typical turn-off time	< 30 ms
Type of protection	Reverse polarity protection

Output data load output

Output name	AC output
Rated operating voltage U_e	500 V AC
Operating voltage range	42 V AC ... 550 V AC
Rated operating current I_e	9 A (AC-51)
Rated operating current I_e	6.5 A (AC-53a)
Mains frequency	50/60 Hz
Load current range	1.5 A ... 9 A (see to derating)
Trigger characteristic in acc. with IEC 60947-4-2	Class 10A
Cooling time	20 min. (for auto reset)
Leakage current	0 mA
Type of protection	Surge protection

Output data reply output

Output name	Acknowledge output
Note	Confirmation: floating change-over contact, signal contact
Contact type	1 PDT
Switching capacity according to IEC 60947-5-1	3 A (230 V, AC15)
Switching capacity according to IEC 60947-5-1	2 A (24 V, DC13)

Overspeed tripping

Operate threshold	> 45 A
Response time	2 s

General

Switching frequency	≤ 2 Hz (Load-dependent)
Mounting position	vertical (horizontal DIN rail, motor output below)
Mounting type	DIN rail mounting
Assembly instructions	alignable, for spacing see derating
Operating mode	100% operating factor
Maximum power dissipation	7 W
Minimum power dissipation	0.88 W
Operating voltage display	Green LED
Status display	Yellow LED
Indication	Red LED

Connection data, input side

Hybrid motor starter - ELR H3-IES-PT- 24DC/500AC-9 - 2903918

Technical data

Connection data, input side

Connection name	Control circuits
Connection method	Push-in connection
Stripping length	10 mm
Conductor cross section solid	0.2 mm² ... 2.5 mm²
Conductor cross section flexible	0.2 mm² ... 2.5 mm²
Conductor cross section AWG	24 ... 14

Connection data, output side

Connection name	Load circuit
Connection method	Push-in connection
Stripping length	10 mm
Conductor cross section solid	0.2 mm² ... 2.5 mm²
Conductor cross section flexible	0.2 mm² ... 2.5 mm²
Conductor cross section AWG	24 ... 14

Ambient conditions

Ambient temperature (operation)	-25 °C ... 70 °C (observe derating)
Ambient temperature (storage/transport)	-40 °C ... 80 °C
Degree of protection	IP20

Dimensions

Width	22.5 mm
Height	99 mm
Depth	114.5 mm

UL data

SCCR	100 kA (500 V AC (fuse: 30 A class CC/30 A class J (high fault)))
SCCR	5 kA (500 V AC (fuse: 20 A RK5 (standard fault)))
FLA	6.5 A (500 V AC)
Group installation	20 A (class RK5, SCCR 5kA, #24 - 14 AWG max. solid and stranded)
Group installation	30 A (class CC or J, SCCR 100kA, #24 - 14 AWG max, solid and stranded)
Category code	NLDX

Insulation characteristics

Rated insulation voltage	500 V
Rated surge voltage	6 kV
Overvoltage category	III
Degree of pollution	2
Designation	Insulation characteristics between the control input and control supply voltage, and auxiliary circuit to the main circuit
Insulation	Safe isolation (IEC 60947-1/EN 50178) at operating voltage ≤ 300 V AC
Insulation	Basic isolation (IEC 60947-1) at operating voltage 300 ... 500 V AC
Insulation	Safe isolation (EN 50178) at operating voltage 300 ... 500 V AC

Hybrid motor starter - ELR H3-IES-PT- 24DC/500AC-9 - 2903918

Technical data

Insulation characteristics

Designation	Isolation characteristics between the control input and control supply voltage to auxiliary circuit
Insulation	Safe isolation (IEC 60947-1) in the auxiliary circuit ≤ 300 V AC
Insulation	Safe isolation (EN 50178) in the auxiliary circuit ≤ 300 V AC

Standards and Regulations

Designation	Standards/regulations
Standards/regulations	IEC 60947-1
Standards/regulations	IEC 60947-4-2
Standards/regulations	IEC 61508
Standards/regulations	ISO 13849
ATEX	Ⓔx II (2) G [Ex e] [Ex d] [Ex px]
ATEX	Ⓔx II (2) D [Ex t] [Ex p]

Approvals/conformities

Safety Integrity Level according to IEC 61508	≤ 3 (Safe shutdown)
Safety Integrity Level according to IEC 61508	2 (Motor protection)
Category acc. to EN ISO 13849	≤ 3 (Safe shutdown)
Performance level according to ISO 13849	≤ e (Safe shutdown)
ATEX	Ⓔx II (2) G [Ex e] [Ex d] [Ex px]
ATEX	Ⓔx II (2) D [Ex t] [Ex p]
EU-type examination certificate	PTB 07 ATEX 3145
UL certificate	NLDX.E228652

Environmental Product Compliance

China RoHS	Environmentally Friendly Use Period = 50
China RoHS	For details about hazardous substances go to tab “Downloads”, Category “Manufacturer's declaration”

Classifications

eCl@ss

eCl@ss 5.0	27024002
eCl@ss 5.1	27024002
eCl@ss 6.0	27024002
eCl@ss 7.0	27024002
eCl@ss 8.0	27024002
eCl@ss 9.0	27024002

ETIM

ETIM 2.0	EC001037
ETIM 3.0	EC001037
ETIM 4.0	EC001037
ETIM 5.0	EC001037

Hybrid motor starter - ELR H3-IES-PT- 24DC/500AC-9 - 2903918

Classifications

ETIM

ETIM 6.0	EC001037

UNSPSC

UNSPSC 6.01	30211915
UNSPSC 7.0901	39121514
UNSPSC 11	39121514
UNSPSC 12.01	39121514
UNSPSC 13.2	25173902

Approvals

ATEX / UL Listed / cUL Listed / IECEE CB Scheme / UL Listed / cUL Listed / EAC / EAC / CCC-s / cULus Listed /

Approval details

ATEX

UL Listed

cUL Listed

IECEE CB Scheme

EAC

CCC-s

cULus Listed

Accessories

Loop bridge

Hybrid motor starter - ELR H3-IES-PT- 24DC/500AC-9 - 2903918

Accessories

BRIDGE-PT 2 - 2904490

BRIDGE-PT 3 - 2904491

BRIDGE-PT 4 - 2904492

BRIDGE-PT 5 - 2904493

BRIDGE-PT 6 - 2904494

BRIDGE-PT 7 - 2904495

Hybrid motor starter - ELR H3-IES-PT- 24DC/500AC-9 - 2903918

Accessories

BRIDGE-PT 8 - 2904496

BRIDGE-PT 9 - 2904497

BRIDGE-PT 10 - 2904498

Cover

BRIDGE COVER - 2906240

Device marking

US-EMLP (15X5) - 0828790

Hybrid motor starter - ELR H3-IES-PT- 24DC/500AC-9 - 2903918

Accessories

UC-EMLP (15X5) - 0819301

Assembly adapter

EM-CPS-225 - 1002634

EM-CPS-405 - 1002635

EM-CPS-TB3/63A - 1002633

Accessories

EM-CPS-DA-22,5F/16A - 1002668

Drawings

Hybrid motor starter - ELR H3-IES-PT- 24DC/500AC-9 - 2903918

Block diagram

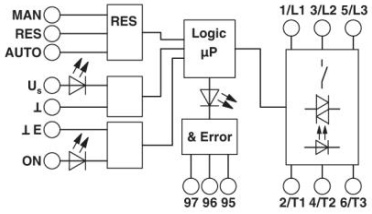

Diagram

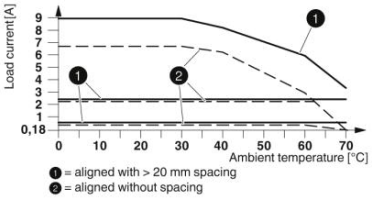

Derating diagram

Circuit diagram

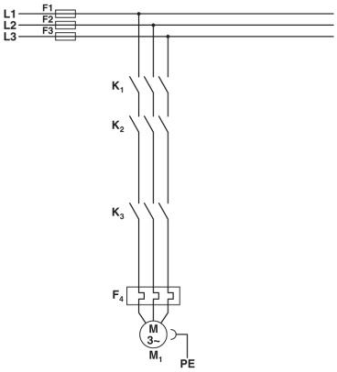

Conventional structure

Main current path for contactor according to category 3

K1 + K2 = Emergency stop contactor

K3 = Right contactor

F4 = Motor protection relay

Hybrid motor starter - ELR H3-IES-PT- 24DC/500AC-9 - 2903918

Circuit diagram

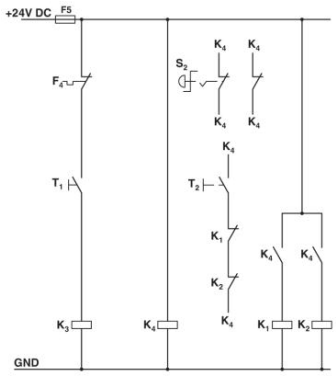

Conventional structure

Control current path for contactor according to category 3

K1 + K2 = Emergency stop contactor

K3 = Right contactor

K4 = PSR SCP-24DC.../safety relay

T1 = Right, T3 = Reset

S2 = Emergency stop

F4 = Motor protection relay

Circuit diagram

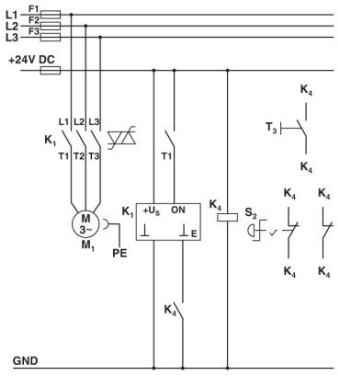

Structure with CONTACTRON

Main and control current path for ,3 in 1, hybrid motor starter according to category 3

K1 = ,3 in 1, hybrid motor starter

K4 = PSR SCP-24DC.../safety relay

T1 = Right, T3 = Reset

S2 = Emergency stop

Phoenix Contact 2016 © - all rights reserved
http://www.phoenixcontact.com