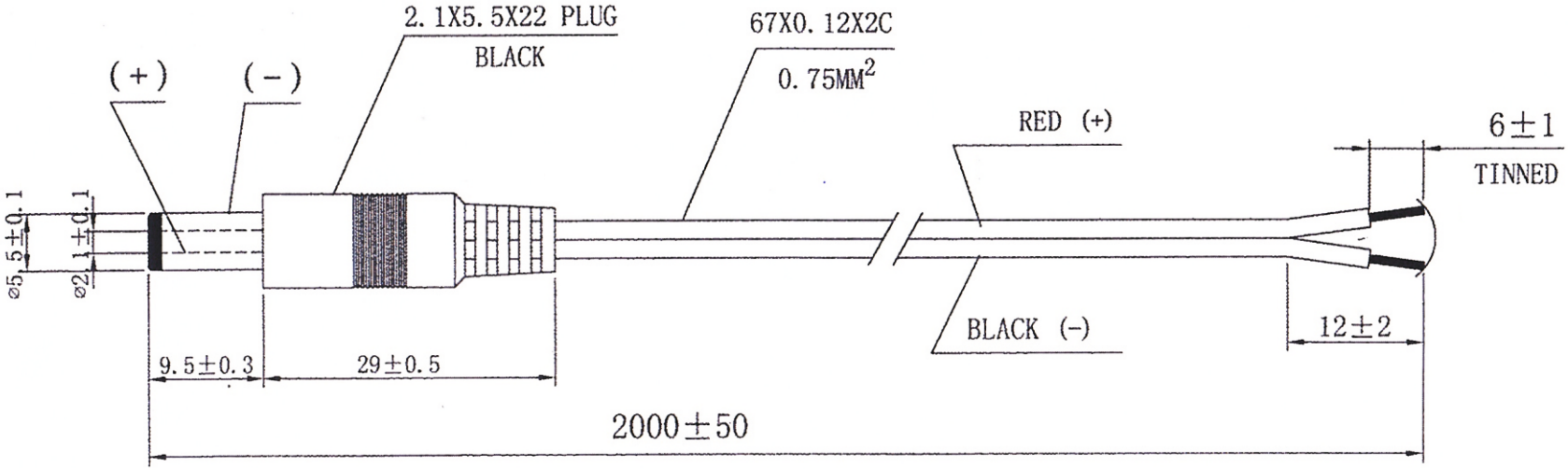

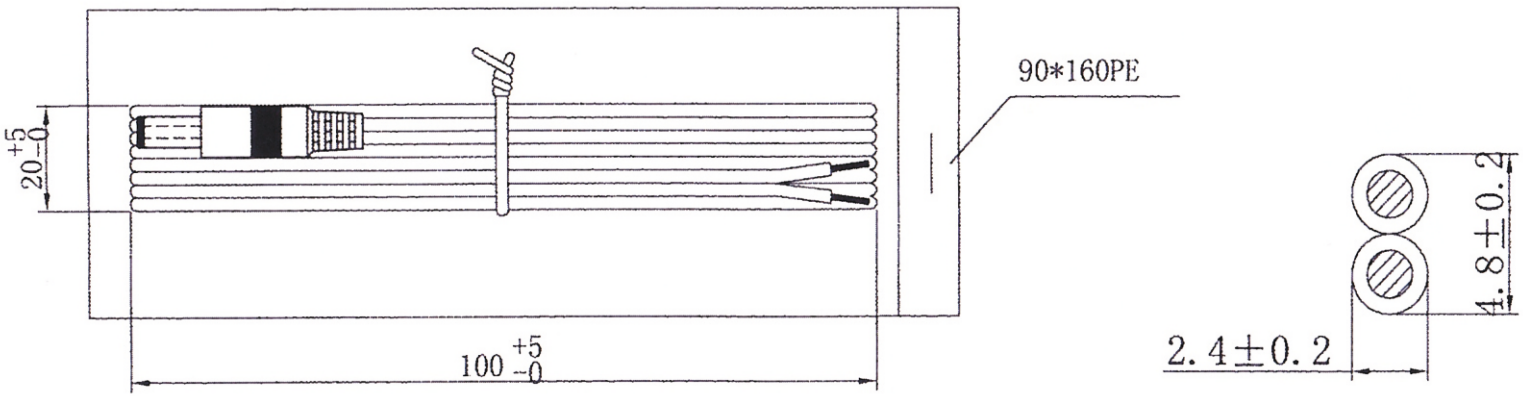

All material complies with RoHS requirement