Datasheet

1. Scope:

This specification for approval relates to Thick Film Chip Resistors (Terminal Lead Free)

2. Type designation:

The type designation shall be in the following form:

All part numbers in the coding below start with "TC-" and end with "203"

Ex.

Type	Power Rating	Resistance tolerance	Nominal Resistance
RMC 0402	1/16W	F,a J	75Ω
RMC 0603	1/10W-S		
RMC 0805	1/8W-S		
RMC 1206	1/4W-S		

3. Ratings:

Type	RMC 0402	RMC 0603	RMC 0805	RMC 1206
Power Rating	1/16W (0.0625W)	1/10W-S (0.10W)	1/8W-S (0.125W)	1/4W-S (0.25W)
Rated Current(Jumper)	1A	1A	2A	2A
Max. Overload Current(Jumper)	2A	2A	4A	4A
Max. Working Voltage	50 V	50 V	150 V	200 V
Max. Overload Voltage	100 V	100 V	300 V	400 V
Temperature Range	-55℃～+155℃			
Ambient Temperature	70 ℃			

3.1 Power rating:

Resistors shall have a power rating based on continuous load operation at an ambient temperature of 70 ℃ . For temperature in excess of 70 ℃ , The load shall be derate as shown in figure 1.

Figure 1

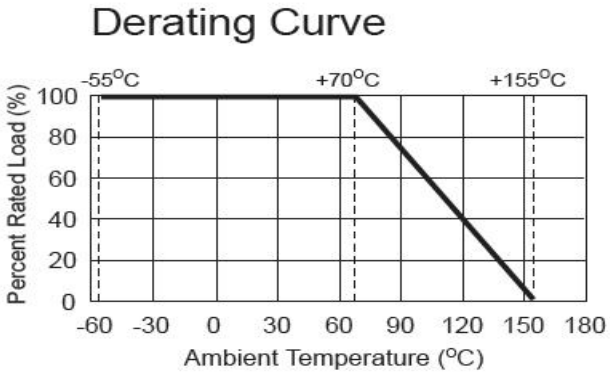

3.2 Nominal Resistance

Effective figures of nominal resistance shall be in accordance with E-24 and E-96 series for 1 % and E-24 series for 2 % and 5 %

4. Construction :

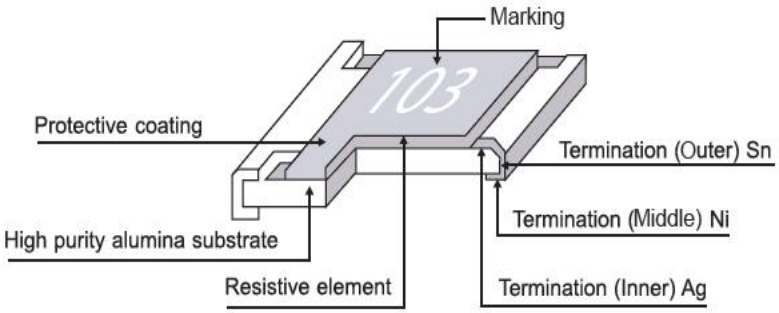

Thick Film Chip Resistors (Terminal Lead Free)

5. Power rating and dimensions

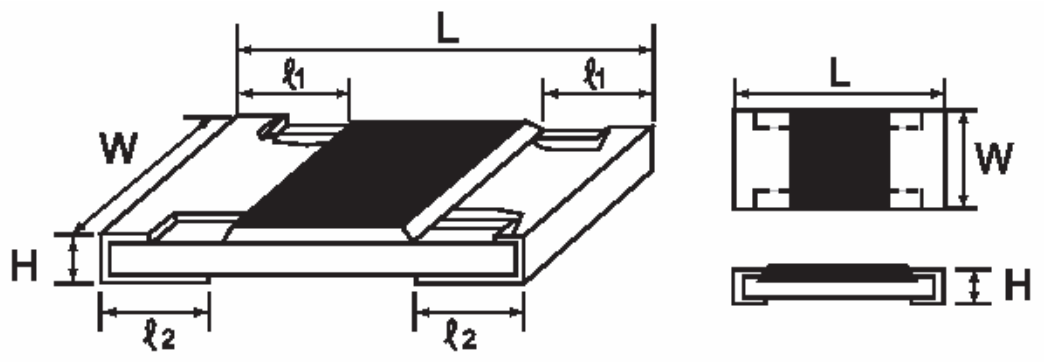

Dimension :

Type	Dimension (mm)				
	L	W	H	ℓ1	ℓ2
RMC 0402	1.00 ± 1.0	0.50 ± 0.05	0.35 ± 0.05	0.20 ± 0.10	0.25 ± 0.10
RMC 0603	1.60 ± 0.10	0.80 + 0.15 - 0.10	0.45 ± 0.10	0.30 ± 0.20	0.30 ± 0.20
RMC 0805	2.00 ± 0.15	1.25 + 0.15 - 0.10	0.55 ± 0.10	0.40 ± 0.20	0.40 ± 0.20
RMC 1206	3.10 ± 0.15	1.55 + 0.15 - 0.10	0.55 ± 0.10	0.45 ± 0.20	0.45 ± 0.20

Power Rating :

Type	Power Rating at 70 ℃	Tolerance %	Resistance Range	Standard Series
RMC 0402	1/16W	Jumper	< 50mΩ	
		± 1	10Ω ~ 1MΩ	E-96
		± 5	10Ω ~ 1MΩ	E-24
RMC 0603	1/10W-S	Jumper	< 50mΩ	
		± 1	10Ω ~ 1MΩ	E-96
		± 5	10Ω ~ 1MΩ	E-24
RMC 0805	1/8W-S	Jumper	< 50mΩ	
		± 1	10Ω ~ 1MΩ	E-96
		± 5	10Ω ~ 1MΩ	E-24
RMC 1206	1/4W-S	Jumper	< 50mΩ	
		± 1	10Ω ~ 1MΩ	E-96
		± 5	10Ω ~ 1MΩ	E-24

Thick Film Chip Resistors (Terminal Lead Free)

Mutiplier Code :

Code	A	B	C	D	E	F	G	H	X	Y	Z
Multiplier	10^{0}	10^{1}	10^{2}	10^{3}	10^{4}	10^{5}	10^{6}	10^{7}	10^{-1}	10^{-2}	10^{-3}

Coding

XX

Resistance Code

Formula

X

Multiplier Code

Example :

10.2KΩ = 102 X 10 Ω = 02C

102 → 02, 10 → C

33.2Ω = 332 X 10^{-1} Ω = 51X

332 → 51, 10^{-1} → X

Value	Code	Value	Code	Value	Code	Value	Code	Value	Code
100	**01**	162	**21**	261	**41**	422	**61**	681	**81**
102	**02**	165	**22**	267	**42**	432	**62**	698	**82**
105	**03**	169	**23**	274	**43**	442	**63**	715	**83**
107	**04**	174	**24**	280	**44**	453	**64**	732	**84**
110	**05**	178	**25**	287	**45**	464	**65**	750	**85**
113	**06**	182	**26**	294	**46**	475	**66**	768	**86**
115	**07**	187	**27**	301	**47**	487	**67**	787	**87**
118	**08**	191	**28**	309	**48**	499	**68**	806	**88**
121	**09**	196	**29**	316	**49**	511	**69**	825	**89**
124	**10**	200	**30**	324	**50**	523	**70**	845	**90**
127	**11**	205	**31**	332	**51**	536	**71**	866	**91**
130	**12**	210	**32**	340	**52**	549	**72**	887	**92**
133	**13**	215	**33**	348	**53**	562	**73**	909	**93**
137	**14**	221	**34**	357	**54**	576	**74**	931	**94**
140	**15**	226	**35**	365	**55**	590	**75**	953	**95**
143	**16**	232	**36**	374	**56**	604	**76**	976	**96**
147	**17**	237	**37**	383	**57**	619	**77**		
150	**18**	243	**38**	392	**58**	634	**78**		
154	**19**	249	**39**	402	**59**	649	**79**		
158	**20**	255	**40**	412	**60**	665	**80**		

*Marking for 0603 E-96 series, the resistance value that no have multiplier code indicate marking follow this:
The first two digits are significant figures of resistance and the third one denoted number of zeros and under line the marking letters.

Ex. | | 122 | | 1.2KΩ

Thick Film Chip Resistors (Terminal Lead Free)

6. Marking :

6.1 Resistors

A. ± 5% Tolerance 0603, 0805, 1206: the first two digits are significant figures of resistance and the third onedenoted number of zeros.

Ex. | | 333 | | 33KΩ

B. For ohmic values below 10 Ω

Ex. | | 2R2 | | 2.2Ω

C. For E-96 series [±1% (F) tolerance] in 0603 size 3 digit system (due to space restrictions) please refer to page 4 for coding formula

Ex. | | 02C | | 10.2KΩ

D. ±1% Tolerance 0805, 1206 : 4 Digits, the first three digits are singnificant figures of resistance and the fourth digit denoted number of zeros.Letter"R" is for decimal point.

Ex. | | 2701 | | 2.7KΩ

E. Chip Resistors type 0402 No marking

6.2 Labels

Label shall be marked with the following item :

A. Nominal Resistance and Resistance Tolerance

B. Power Rating and Size

C. Quantity

D. Part No.

E. P.O.No.

F. Lot No.

Ex.

CHIP RESISTOR

RESISTANCE: **75** Ω ± **1** %

WATTAGE: **1/10W-S** SIZE: **0603**

QUANTITY: **5,000** PCS **Pb-Free**

PART NO.:

P.O.NO.:

LOT NO. : **825723** **0603SAF750JT5E**

Remark : **For 0603** ± 1 % : Label is 75E, value is 75Ω, marking is 85X

Thick Film Chip Resistors (Terminal Lead Free)		
7. Performance specification :		
Characteristics	Limits	Test Methods (JIS C 5201-1)
*Insulation resistance	1,000 MΩ or more	Apply 500V DC between protective coating and termination for 1 min, then measure (Sub-clause 4.6)
*Dielectric withstanding voltage	No evidence of flashover mechanical damage, arcing or insulation break down	Apply 100V(0402) 300V(0603) & 500V (0805,1206,1210,2010, 2512) AC between protective coating and termination for 1 minute (Sub-clause 4.7)
Temperature coefficient	1Ω-10Ω : ± 400 PPM/℃ 11Ω-100Ω : ± 200 PPM/℃ >100Ω : ± 100 PPM/℃	Natural resistance change per temp. degree centigrade. $\frac{R_2-R_1}{R_1(t_2-t_1)} \times 10^6$ (PPM/℃) R_1: Resistance value at room temperature (t1) R_2: Resistance value at room temp. plus 100 ℃ (t2) (Sub-clause 4.8)
Short time overload	Resistance change rate is ± 5% (2.0% + 0.1Ω) Max. ± 1% (1.0% + 0.1Ω) Max.	Permanent resistance change after the application of a potential of 2.5 times RCWV for 5 seconds (Sub-clause 4.13)

Thick Film Chip Resistors (Terminal Lead Free)

7. Performance specification :

Characteristics	Limits	Test Methods (JIS C 5201-1)
*Solderability	95 % coverage Min.	Test temperature of solder : 245 ± 3℃ Dipping them solder : 2-3 seconds (Sub-clause 4.17)
Soldering temp. reference	Electrical characteristics shall be satisfied. Without distinct deformation in appearance. (95 % coverage Min.)	<u>Wave soldering condition:</u> (2 cycles Max.) Pre-heat : 100 ~ 120 ℃, 30 ± 5 sec. Suggestion solder temp.: 235 ~ 255 ℃, 10 sec. (Max.) Peak temp.: 260 ℃ <u>Reflow soldering condition:</u> (2 cycles Max.) Pre-heat : 150 ~ 180 ℃, 90 ~ 120 sec. Suggestion solder temp.: 235 ~ 255 ℃, 20 ~ 40 sec. Peak temp.: 260 ℃ 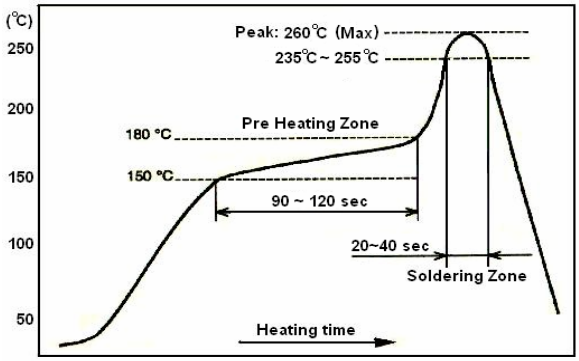 Temperature profile for avaluation <u>Hand soldering condition:</u> The soldering iron tip temperature should be less than 300℃and maximum contract time should be 5 sec.

Thick Film Chip Resistors (Terminal Lead Free)

7. Performance specification :

Characteristics	Limits	Test Methods (JIS C 5201-1)
Soldering Heat	Resistance change rate is: ±(1%+0.05Ω) Max.	Dip the resistor into a solder bath having a temperature of 260°C±3°C and hold it for 10±1 seconds. (Sub-clause 4.18)
Temperature cycling	Resistance change rate is ± 5% (1.0% + 0.05Ω) Max. ± 1% (0.5% + 0.05Ω) Max.	Resistance change after continuous 5 cycles for duty cycle specified below :

Step	Temperature	Time
1	-55℃ ± 3℃	30 mins
2	Room temp.	10～15 mins
3	+155℃ ± 2℃	30 mins
4	Room temp.	10～15 mins

(Sub-clause 4.19)

Load life in humidity	Resistance change rate is ± 5% (3.0% + 0.1Ω) Max. ± 1% (1.0% + 0.1Ω) Max.	Resistance change after 1,000 hours (1.5 hours "on", 0.5 hour "off") at RCWV in a humidity chamber controlled at 40℃ ± 2℃ and 90 to 95 % relative humidity (Sub-clause 4.24.2.1)
Load Life	Resistance change rate is ± 5% (3.0% + 0.1Ω) Max. ± 1% (1.0% + 0.1Ω) Max.	Permanent resistance change after 1,000 hours operating at RCWV, with duty cycle of (1.5 hours"on", 0.5 hour"off") at 70℃ ± 2℃ ambient (Sub-clause 4.25.1)
Terminal bending	Resistance change rate is ± (1.0% + 0.05Ω) Max.	Twist of Test Board : Y/X = 5/90 mm for 10 seconds (Sub-clause 4.33)

The resistors of 0Ω only can do the characteristic noted of *

Thick Film Chip Resistors (Terminal Lead Free)

8. Packing specification :

* Taping Dimension (mm)

A. Paper taping

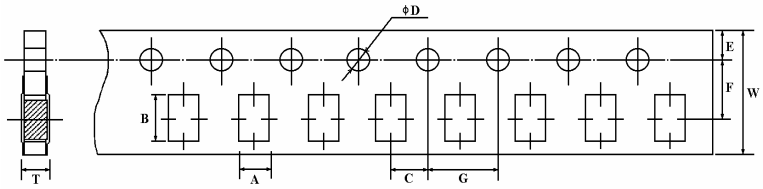

Type	A ± 0.2	B ± 0.2	C ± 0.05	ϕ D +0.1 - 0	E ± 0.1	F ± 0.05	G ± 0.1	W ± 0.2	T ± 0.1
RMC 0402	0.65	1.15	2.0	1.5	1.75	3.5	4.0	8.0	0.45
RMC 0603	1.10	1.90	2.0	1.5	1.75	3.5	4.0	8.0	0.67
RMC 0805	1.65	2.40	2.0	1.5	1.75	3.5	4.0	8.0	0.81
RMC 1206	2.00	3.60	2.0	1.5	1.75	3.5	4.0	8.0	0.81

* Reel Dimension (mm)

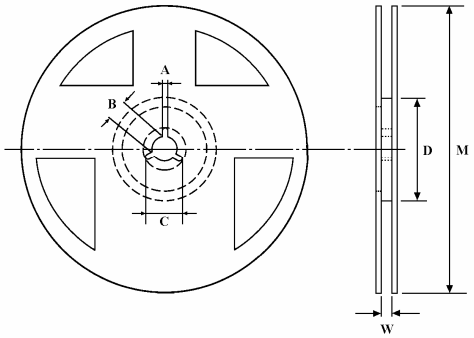

Type	Packaging	Quantity Per Reel	A ± 0.5	B ± 0.5	C ± 0.5	D ± 1	M ± 2	W ± 1
RMC 0402	Paper	10,000 pcs.	2	13	21	60	178	10
RMC 0603	Paper	5,000 pcs.	2	13	21	60	178	10
RMC 0805	Paper	5,000 pcs.	2	13	21	60	178	10
RMC 1206	Paper	5,000 pcs.	2	13	21	60	178	10

Remark : ϕ M (1) 10,000Pcs/Reel = 255 or 20,000Pcs/Reel = 330

(2) RMC 0402: 20,000Pcs/Reel = 255 or 40,000pcs/Reel = 330

(3) For paper taping, can pack T/R-1,000pcs

Part Number System

Explanation of Part Number System

Thick Film Chip Resistors (Terminal Lead Free)

All part numbers in the coding below start with "TC-" and end with "203"

1	2	3	4	5	6	7	8	9	10	11	12	13	14
0	4	0	2	W	G	F	7	5	0	J	T	C	E

Product Type:
Fill-in these 4 digits with the Chip resistor types as follows:
0402
0603
0805
1206

Wattage:
Fill-in these 2 digits with the codes as follows:
WG = 1/16W
SA = 1/10W-S
S8 = 1/8W-S
S4 = 1/4W-S

Tolerance:
F ~ ± 1%
G ~ ± 2%
J ~ ± 5%
0 ~ Jumper

Resistance Value:
1. E-24 series: the 1st digit is "0", the 2nd & 3rd digits are for the significant figures of the resistance and the 4th indicate the number of zeros following;
2. E-96 series: the 1st to 3rd digits are for the significant figures of the resistance and the 4th digit indicate the number of zeros following.

Decimal point is expressed :
"**J**"~ 0.1,"**K**"~0.01,"**L**"~0.001
Ex: 2Ω26 ~226K, 226Ω ~2260

Packing Quantity:
5 = 5,000pcs
C = 10,000pcs

Packing Type:
T = T/R Packing

Special Feature:
0 = NIL
E = Lead Free

Sample :

RMC	1/16W	(0402)	+/- 1%	75Ω	T/R--10,000	→	0402WGF750JTCE
RMC	1/10W-S	(0603)	+/- 1%	75Ω	T/R--5,000	→	0603SAF750JT5E
RMC	1/8W-S	(0805)	+/- 1%	75Ω	T/R--5,000	→	0805S8F750JT5E
RMC	1/4W-S	(1206)	+/- 1%	75Ω	T/R--5,000	→	1206S4F750JT5E

Thick Film Chip Resistors (Terminal Lead Free)

Environment Related Substance

This product complies to EU RoHS directive, EU PAHs directive, EU PFOS directive and Halogen free.

Ozone layer depleting substances.

Ozone depleting substances are not used in our manufacturing process of this product.
This product is not manufactured using Chloro fluorocarbons (CFCs), Hydrochlorofluorocarbons (HCFCs), Hydrobromofluorocarbons (HBFCs) or other ozone depleting substances in any phase of the manufacturing process.

Storage Condition

The performance of these products, including the solderability, is guaranteed for a year from the date of arrival at your company, provided that they remain packed as they were when delivered and stored at a temperature of 25°C ± 5°C and a relative humidity of 60%RH ± 10%RH

Even within the above guarantee periods, do not store these products in the following conditions. Otherwise, their electrical performance and/or solderability may be deteriorated, and the packaging materials (e.g. taping materials) may be deformed or deteriorated, resulting in mounting failures.

1. In salty air or in air with a high concentration of corrosive gas, such as Cl_2, H_2S, NH_3, SO_2, or NO_2
2. In direct sunlight