Distributed by Conrad Electronic SE • Klaus-Conrad-Str. 1 • D-92240 Hirschau

Datasheet

Item no. 1586436

V1_0617_02_EN

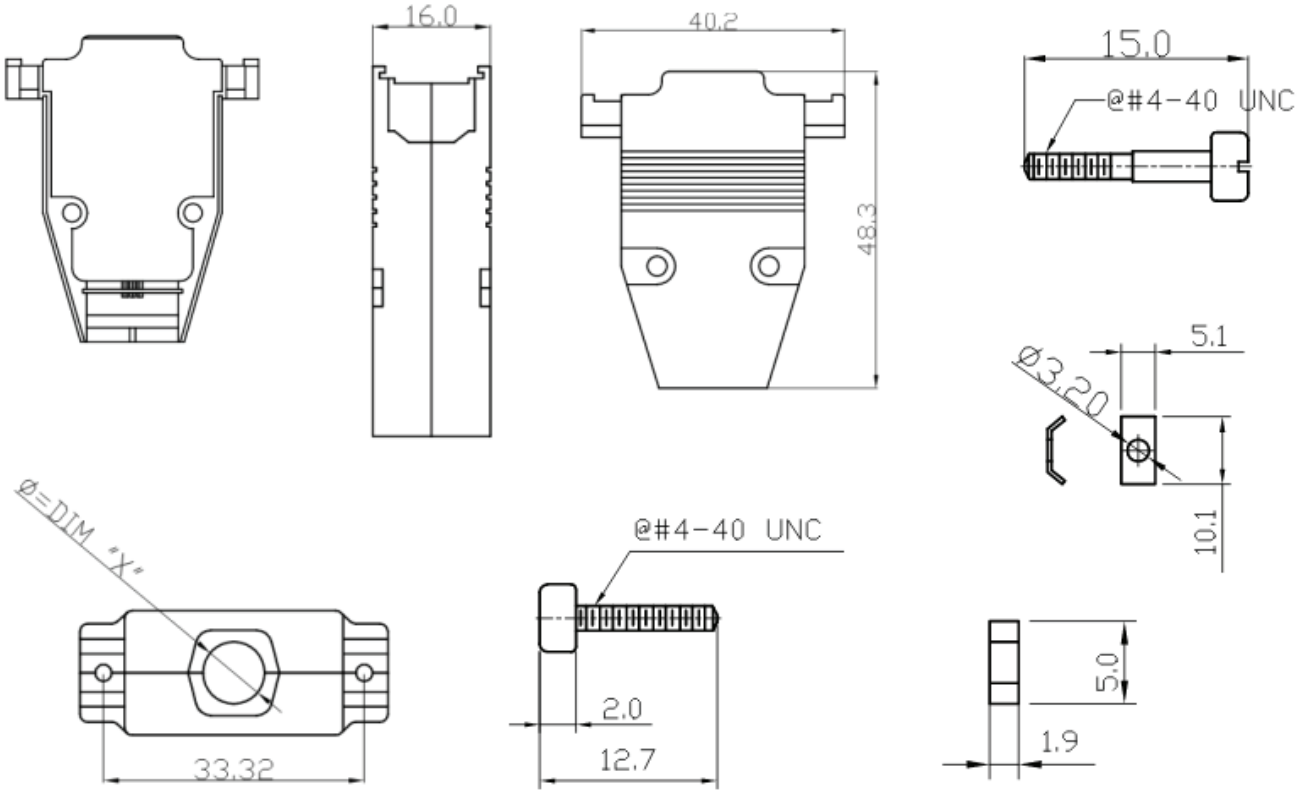

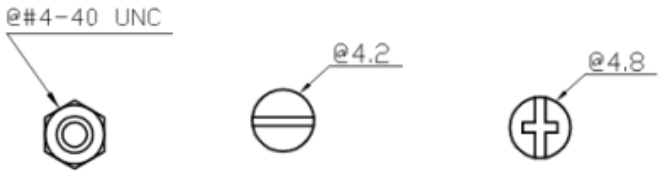

NOTE:
1. MATERIAL: zinc alloy
2. FINISHED: chromate plated
3. Contact No. : 15 Poles
4. CABLE ENTRY SIZE:
   DIMENSION OF "X"=10.0mm
5. PARTS OPTION: SHORT SCREW

RoHS compliant