Datasheet

Item no. 1586480

V1_0617_02_EN

Male

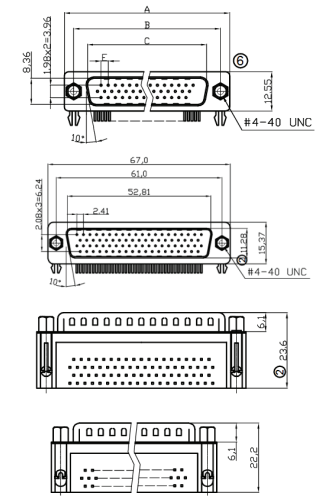

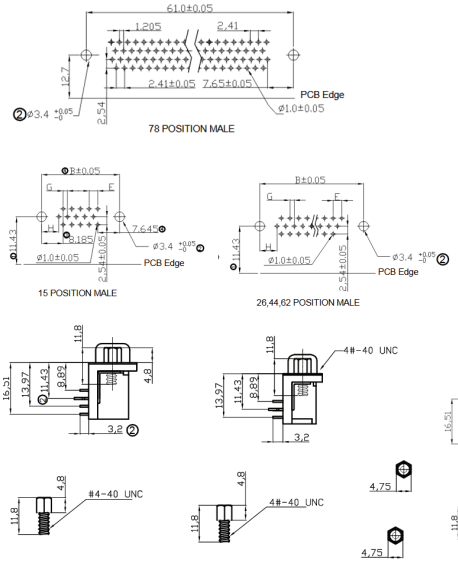

Female

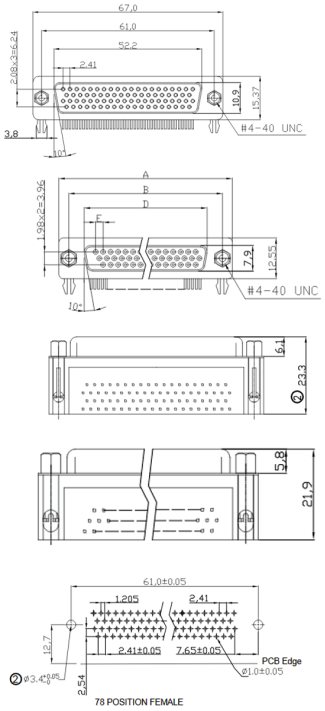

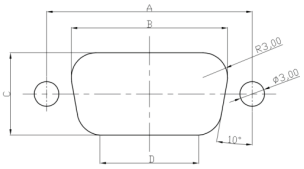

POSITION	A	B	C	D
44	47.04	42.52	10.67	34.06

P.C.B LAYOUT PATTERN

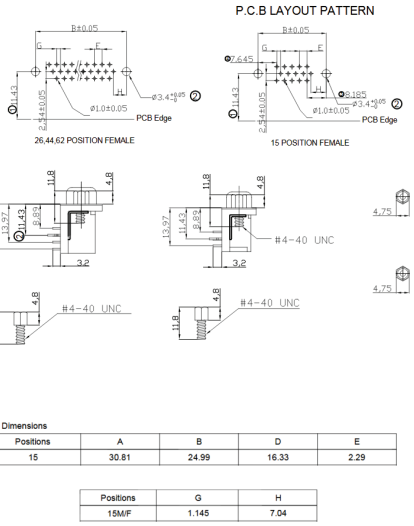

Dimensions

Positions	A	B	C	E
15	30.81	24.99	16.92	2.29

Positions	G	H
15M/F	1.145	7.04

Dimensions

Positions	A	B	D	E
15	30.81	24.99	16.33	2.29

Positions	G	H
15M/F	1.145	7.04

Product Specification

Material
Insulator :Glass-Filled Thermoplastic PBT,UL94V-0 rated ,Black
Contact : Copper alloy, Gold flash full gold
Shell : Steel,100u" Tin Over 50u" min Copper
Clinch Nut: Brass, 100u" min Nickel Plated.
Boardlock :Brass, 100u" min Nickel Plated.
Screwlock :Brass, 100u" min Nickel Plated.

Electrical
Contact Resistance :20 milliohms Max at 1 AMP DC.
Insulation Resistance :1000 magohms at 500 VDC
Dielectric Withstanding Voltage : 1000 VAC/rms 60Hz for 1 minute
Current Rating :3 AMP
Volatge Rating :250 VAC/rms 60Hz
Operating Temperature: -55°C ~ +105°C

Product Specification

Material
Insulator :Glass-Filled Thermoplastic PBT,UL94V-0 rated ,Black
Contact : Copper alloy, Gold flash full gold
Shell : Steel,100u" Tin Over 50u" min Copper
Clinch Nut: Brass, 100u" min Nickel Plated.
Boardlock :Brass, 100u" min Nickel Plated.
Screwlock :Brass, 100u" min Nickel Plated.

Electrical
Contact Resistance :20 milliohms Max at 1 AMP DC.
Insulation Resistance :1000 magohms at 500 VDC
Dielectric Withstanding Voltage : 1000 VAC/rms 60Hz for 1 minute
Current Rating :3 AMP
Volatge Rating :250 VAC/rms 60Hz
OPERATING TEMPERATURE:-55°C+105°C

RoHS compliant

Unit: mm