Datasheet

Item no. 1587931

V1_0817_01_en

Rocker Switch w/ dual color LED, 12V, 20A, On-Off-On

Rating	**20A 12V DC**
Contact Resistance	**50m ohm Max.**
Insulation Resistance	**DC 500V 100M ohm Min.**
Voltage Breakdown	**AC 1500V 1 minute**
Operation Temperature	**−20°C~85°C**
Switch Function	**3P SPDT ON−OFF−ON**

Mounting Hole

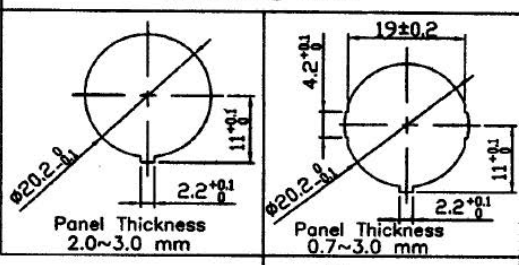

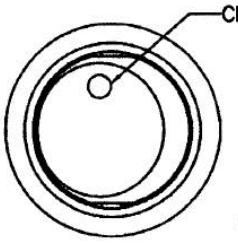

Material:
Frame: Nylon 66 (94−V2), Black
Actuator: Nylon 66 (94−V2), Black
Clear Lens: PC Clear (94−V2),
Terminals: Silver plated, Copper alloy
LED: Bi−colour LED

Diagram

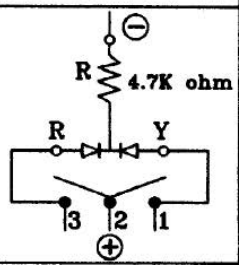

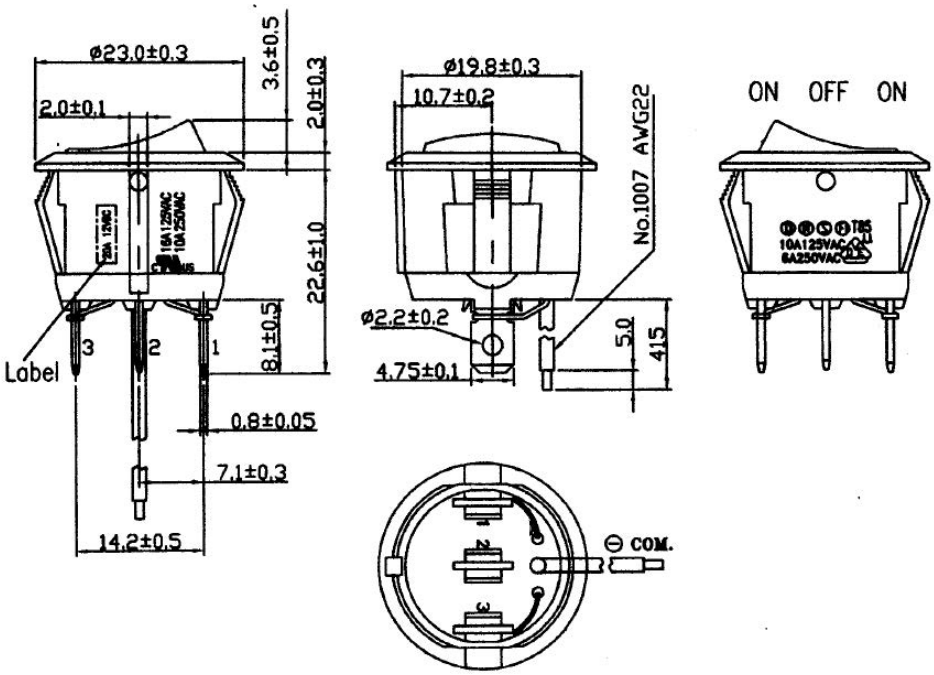

Unit: mm

This is a publication by Conrad Electronic SE, Klaus-Conrad-Str. 1, D-92240 Hirschau (www.conrad.com).
All rights including translation reserved. Reproduction by any method, e.g. photocopy, microfilming, or the capture in electronic data processing systems require the prior written approval by the editor. Reprinting, also in part, is prohibited. This publication represents the technical status at the time of printing.

© Copyright 2017 by Conrad Electronic SE.