Datasheet

Item no.1587941

V1_0717_01_en

Indicator Light, 3mm Green LED

LED Color	Lens Color	VF	IF	Viewing Angle	Mcd
Green	Green diffused	2.1V	20mA	50°	45
Insulation Resistance		DC500V 100M OHM Min	Mounting Hole	Circuit Diagram	
Dielectric Strength		AC500V 1 minute		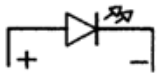	
Operation Temperature		(-)25°C-+85°C			
			Panel Thickness: 3.5 max		

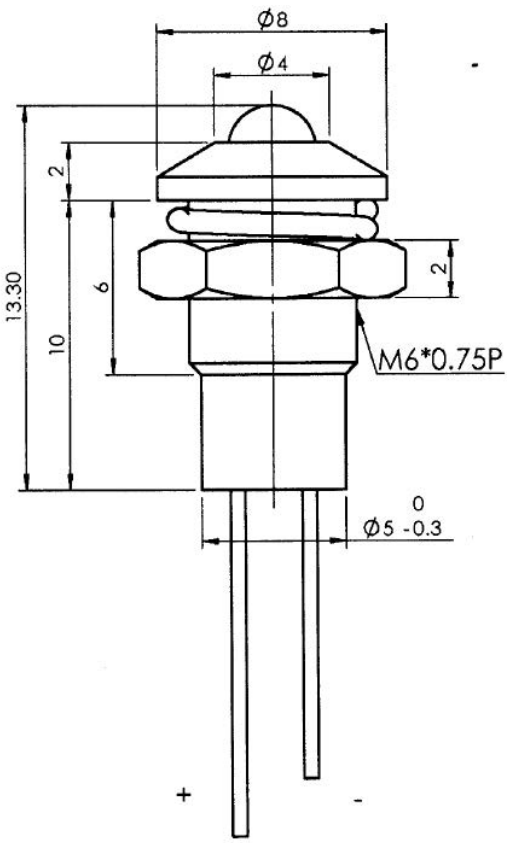

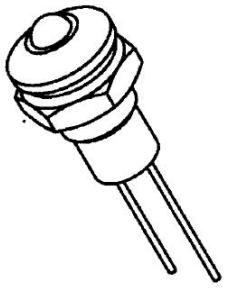

Unit: mm

Remark:
1. LED Type: Ø3mm
2. Unless Otherwise Specified All Tolerances
To Be ±0.2
3. ROHS Compliant

This is a publication by Conrad Electronic SE, Klaus-Conrad-Str. 1, D-92240 Hirschau (www.conrad.com).
All rights including translation reserved. Reproduction by any method, e.g. photocopy, microfilming, or the capture in electronic data processing systems require the prior written approval by the editor. Reprinting, also in part, is prohibited. This publication represents the technical status at the time of printing.

© Copyright 2017 by Conrad Electronic SE.