Distributed by Conrad Electronic SE • Klaus-Conrad-Str. 1 • D-92240 Hirschau

# Datasheet

## Item no. TC-MS05

### 1.Operation Characteristics

| | | |
|---|---|---|
| Operating Force (OF) | : | Max.35 gf |
| Releasing Force (RF) | : | Min. 8 gf |
| Free Position ( FP ) | : | Max.20.5 mm |
| Operating Position (OP) | : | 17.5±0.8 mm |
| Movement Differential (MD) | : | Max.0.8 mm |
| Over-travel (OT) | : | Min. 0.8 mm |
| Pre-travel (PT) | : | Max.3.8 mm |

### 3. Environments

| | | |
|---|---|---|
| Operating Temperature | : | -40 ~ 120 (with no icing ) |
| Vibration Resistance | : | 10~55Hz, displacement 0.75mm(p-p) |
| Shock Resistance | : | Destruction: 1,000 m/s$^2$ {approx. 100G} max.<br>Malfunction: 300 m/s$^2$ {approx. 30G} max. |
| Soldering by hand | : | 350 maximum within 5 seconds. |
| Soldering bath | : | 260 maximum within 5 seconds. |

### 2. Specifications
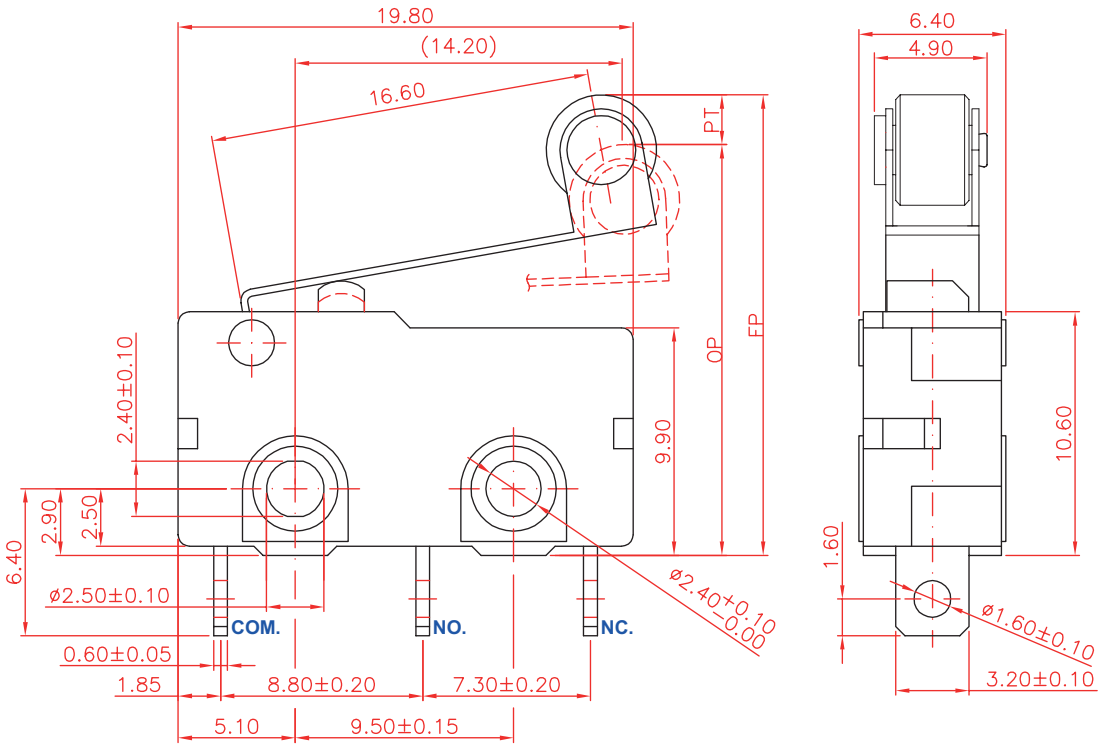
| | | |
|---|---|---|
| Initial Contact Resistance | : | Max.30 mΩ . ( Measured by ohm meter –Open Voltage<1VDC, Driver current -100mA )<br>Before measure the switch contact resistance, please press the switch three times on and off. |
| Initial Dielectric Strength | : | 1,000VAC(50-60HZ)/minute between contacts.<br>1,250VAC(50-60HZ)/minute Live-parts and dead metal parts. |
| Insulation Resistance | : | Min. 100 MΩ ( 500 VDC/ minute ) between Live-parts and dead metal parts. |
| Circuit Arrangement | : | SPDT ( Single pole double throw ) |
| Rating | : | 5A 125/250VAC |
| Service Life | : | Min. 10,000 operations. |
| Rating Load | : | Resistive Load. |
| Operating Frequency | : | 10~30 operations per minute. |
| Safety Certificate | : | UL, cUL |
| Mechanical Service Life | : | Min. 10,000,000 operations. |
| Operating Frequency | : | Max. 120 operations per minute. |