POSITAL
FRABA

IXARC Absolute Rotary Encoder

OCD-S6E1B-1416-SB90-2RW



Interface	
Interface	SSI with Preset + Incremental Push Pull
Optional Incremental Pulses	16384
Manual Functions	Preset + complement via cable or connector
Interface Cycle Time	≥ 25 µs

Outputs	
Output Driver	SSI (RS422) / Incr. (Push Pull)
Output Incremental	A, /A, B, /B, Z, /Z
Quadrature Phasing	90° ± 4.5° electrical
Max. Frequency Response	2 MHz

Electrical Data	
Supply Voltage	10 – 30 VDC
Power Consumption	≤ 1.5 W
Start-Up Time	< 250 ms
Clock Input	RS 422, via Optocoupler
Clock Frequency	100 kHz – 2 MHz
Reverse Polarity Protection	Yes
Short Circuit Protection	Yes
EMC: Emitted Interference	DIN EN 61000-6-4
EMC: Noise Immunity	DIN EN 61000-6-2

MTTF	16.2 years @ 40 °C

Sensor

Technology	Optical
Resolution Singleturn	16 bit
Resolution Multiturn	14 bit
Multiturn Technology	Mechanical Gearing (no Battery)
Accuracy (INL)	±0.0220° (14 – 16 bit), ±0.0439° (≤13 bit)
Sense Signal (Default)	Clockwise shaft movement (front view on shaft)
Code	Binary
Incremental Pulses	16384

Environmental Specifications

Protection Class (Shaft)	IP65
Protection Class (Housing)	IP65
Operating Temperature	-30 °C fixed (-22 °F), -5 °C flexible (+23 °F) - +70 °C (+158 °F)
Humidity	98% RH, no condensation

Mechanical Data

Housing Material	Steel
Housing Coating	Wet coating (RAL 9006 White Aluminium) + Cathodic corrosion protection (>720 h salt spay resistance)
Flange Type	Synchro, ø 58 mm (S)
Flange Material	Aluminum
Shaft Type	Solid, Single Flat, Length = 20 mm
Shaft Diameter	ø 10 mm (0.39")
Shaft Material	Stainless Steel V2A (1.4305, 303)
Max. Shaft Load	Axial 40 N, Radial 110 N
Minimum Mechanical Lifetime (10^8 revolutions with Fa/Fr)	420 (20 N / 40 N), 145 (40 N / 60 N), 100 (40 N / 80 N), 55 (40 N / 110 N)
Rotor Inertia	≤ 30 gcm² [≤ 0.17 oz-in²]
Friction Torque	≤ 3 Ncm @ 20 °C (4.2 oz-in @ 68 °F)
Max. Permissible Mechanical Speed	≤ 12000 1/min
Shock Resistance	≤ 100 g (half sine 6 ms, EN 60068-2-27)
Permanent Shock Resistance	≤ 10 g (half sine 16 ms, EN 60068-2-29)
Vibration Resistance	≤ 10 g (10 Hz – 1000 Hz, EN 60068-2-6)

Length	56,7 mm (2.23")
Weight	280 g (0.62 lb)

Electrical Connection	
Connection Orientation	Radial
Cable Length	2 m [79"]
Wire Cross Section	0.14 mm² / AWG 26
Material / Type	PVC
Cable Diameter	8 mm (0.31 in)
Minimum Bend Radius	35 mm (1.38) fixed, 70 mm (2.76)

Certification	
Approval	CE + cULus listed, Industrial Control Equipment
Product Life Cycle	Established

Connection Plan	
SIGNAL	CABLE COLOR
Power Supply	Brown
GND	White
Data+	Gray
Data-	Pink
Clock+	Green
Clock-	Yellow
DIR	Red
Preset	Blue
A	Black
/A	Violet
B	Gray-Pink
/B	Red-Blue
Z	White-Green
/Z	Brown-Green
Shielding	Shield

Connector-View on Encoder

Pulse Diagram

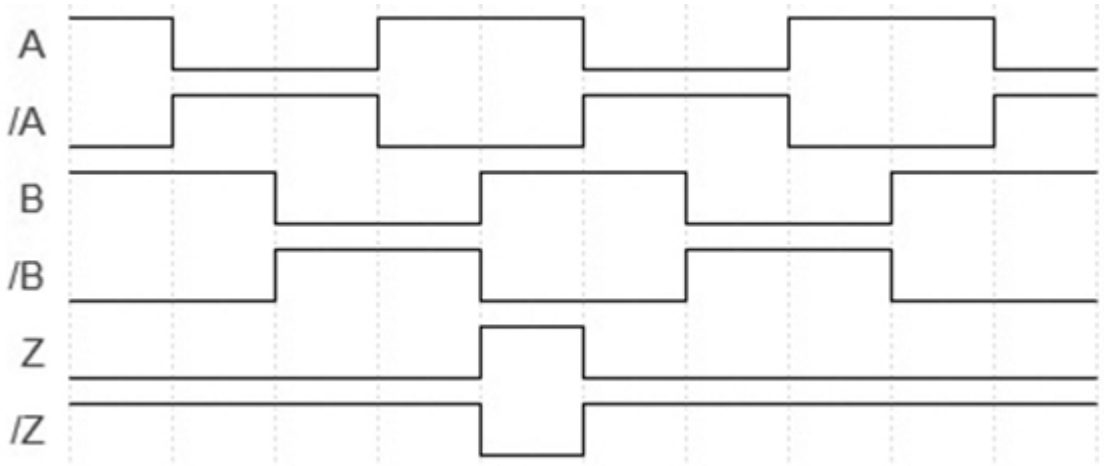

Rotation Clockwise (seen on shaft)

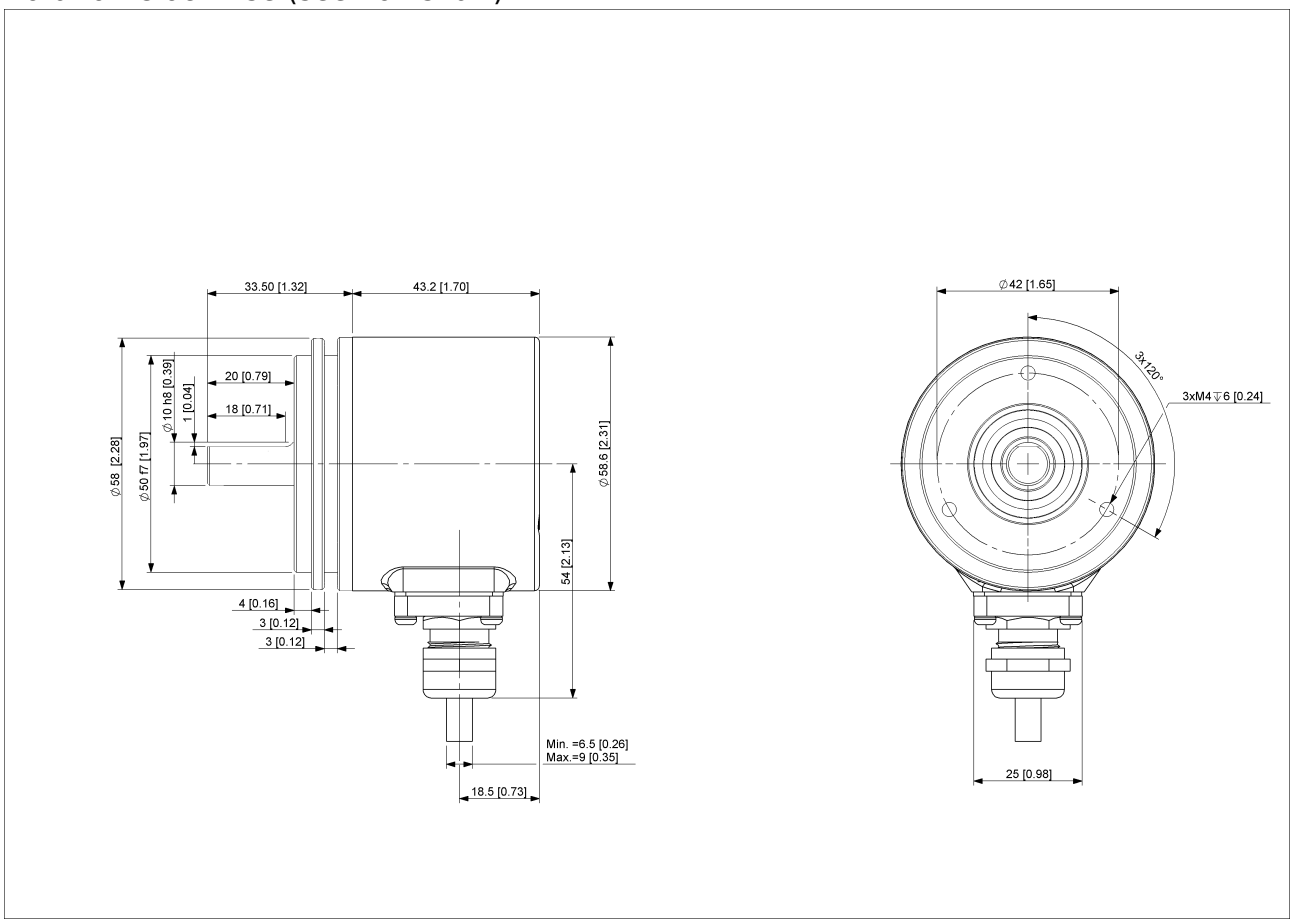

2D Drawing

Accessories

Clamp Disc w/ Eccentric Hole-4pcs
Clamp Disc w/ Centred Hole-4pcs

Coupling Disc Type-10-12
Coupling Bellow Type-10-10
Coupling Bellow Type-06-10
Coupling Bellow Type-08-10
Coupling Bellow Type-10-12
Coupling Bellow Type-10-(1/4")
Coupling Bellow Type-10-(3/8")
Coupling Jaw Type-08-10
Coupling Jaw Type-10-12
Coupling Jaw Type-10-(1/4")
Coupling Jaw Type-10-(3/8")
Coupling Jaw Type-10-10
Coupling Disc Type-06-10
Coupling Disc Type-10-10
More

Mounting Bracket for Synchro Flange w/ fixtures

Contact



POSITAL
Contact Us

The picture and drawing are for general presentation purposes only. Please refer to the "Download" section for detailed technical drawings. All dimension in [inch] mm. © FRABA B.V., All rights reserved. We do not assume responsibility for technical inaccuracies or omissions. Specifications are subject to change without notice.