POSITAL
FRABA

IXARC Absolute Rotary Encoder

UCD-CA01B-1512-G10G-PAV



Interface	
Interface	CANopen
Profile	DS-406
Programming Functions	Resolution, preset, 2 limit switches, 8 CAMS, baud rate, CAN-Identifier, bootloader, transmission modes: polled, cyclic, sync
Features	Round Axis
Transmission Rate	min. 20 kBaud, max. 1 MBaud
Interface Cycle Time	≥ 1 ms
Video Manual	**Watch a simple installation video**

Outputs	
Output Driver	Transceiver (ISO 11898), Galvanically Isolated by Opto-Couplers

Electrical Data	
Supply Voltage	9 – 30 VDC
Power Consumption	≤ 1.2 W
Reverse Polarity Protection	Yes
Short Circuit Protection	Yes
EMC: Emitted Interference	DIN EN 61000-6-4
EMC: Noise Immunity	DIN EN 61000-6-2
MTTF	240 years @ 40 °C

POSITAL
FRABA

Sensor	
Technology	Magnetic
Resolution Singleturn	12 bit
Resolution Multiturn	15 bit
Multiturn Technology	Self powered magnetic pulse counter (no battery, no gear)
Accuracy (INL)	±0.0878° (≤ 12 bit)
Code	Binary

Environmental Specifications	
Protection Class (Shaft)	IP68/IP69K
Protection Class (Housing)	IP68/IP69K
Operating Temperature	-40 °C (-40 °F) - +85 °C (+185 °F)
Storage Temperature	-40 °C (-40 °F) – +85 °C (+185 °F)
Humidity	98% RH, no condensation

Mechanical Data	
Connection Cap Material	None
Housing Material	Stainless Steel V4A (1.4404, 316 L)
Housing Coating	No Coating
Flange Type	Synchro, ø 42 mm Heavy Duty
Flange Material	Stainless steel V4A (1.4404, 316 L)
Shaft Type	Solid, Length = 20 mm
Shaft Diameter	ø 10 mm (0.39")
Shaft Material	Stainless Steel V4A (1.4112, 440 B), hardened
Max. Shaft Load	Axial 300 N, Radial 300 N
Minimum Mechanical Lifetime (10^8 revolutions with Fa/Fr)	7.6 (300N / 300 N), 10 (270 N / 270 N), 200 (100 N / 100 N)
Friction Torque	≤ 3 Ncm @ 20 °C (4.2 oz-in @ 68 °F)
Max. Permissible Mechanical Speed	≤ 6000 1/min
Shock Resistance	≤ 200 g (half sine 11 ms, EN 60068-2-27)
Permanent Shock Resistance	≤ 30 g (half sine 16 ms, EN 60068-2-29)
Vibration Resistance	≤ 30 g (10 Hz – 1000 Hz, EN 60068-2-6)
Length	64,9 mm (2.56")
Weight	400 g (0.88 lb)

Electrical Connection	

Connection Orientation	Axial
Connection Type	Cable / Connector
Connector	M12, Male, 5 pin, a coded, with LED

Certification

Approval	CE + cULus listed, Industrial Control Equipment + E1
Product Life Cycle	Established

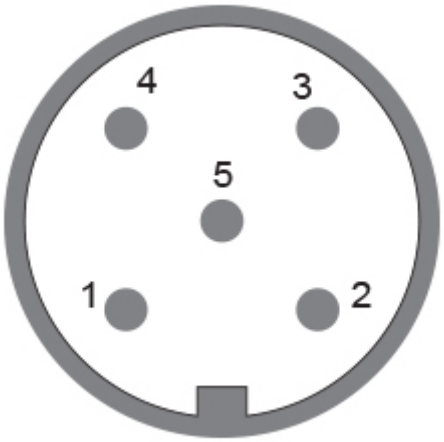

Connection Plan

SIGNAL	PIN NUMBER
Power Supply	2
GND	3
CAN High	4
CAN Low	5
CAN GND	1

Connector-View on Encoder

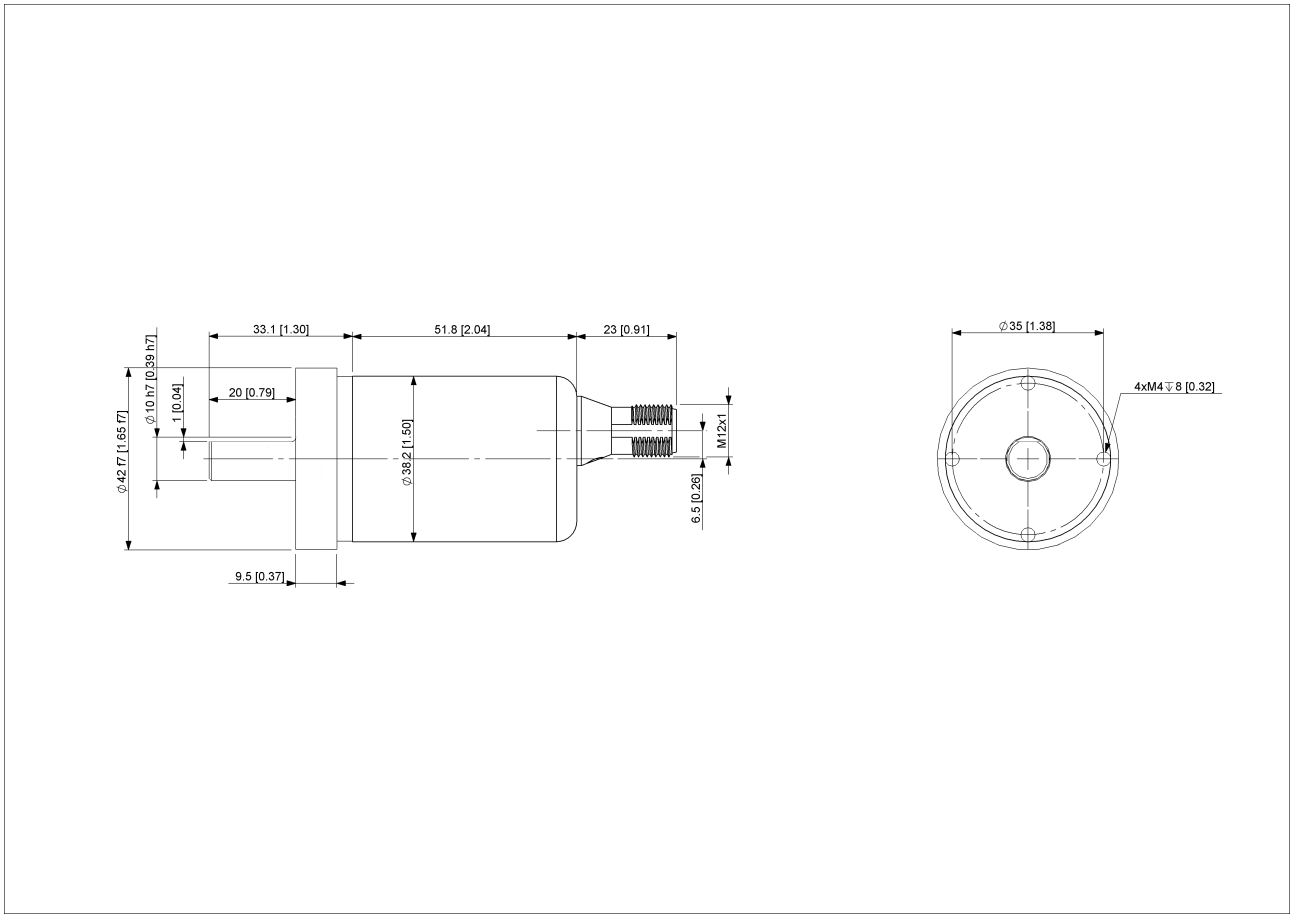

2D Drawing

Accessories

Connectors & Cables
10m PUR Cable, 5pin, A-Coded, f
2m PUR Cable, 5pin, A-Coded, f
5m PUR Cable, 5pin, A-Coded, f
10m PUR Cable, 5pin, A-Coded, f
M12, 5pin A-Coded, Female
More

Coupling Disc Type-10-12
Coupling Bellow Type-10-10
Coupling Bellow Type-06-10
Coupling Bellow Type-08-10
Coupling Bellow Type-10-12
Coupling Bellow Type-10-(1/4")
Coupling Bellow Type-10-(3/8")

Coupling Jaw Type-06-10
Coupling Jaw Type-08-10
Coupling Jaw Type-10-12
Coupling Jaw Type-10-(1/4")
Coupling Jaw Type-10-(3/8")
Coupling Jaw Type-10-10
Coupling Disc Type-06-10
Coupling Disc Type-10-10
More

Contact



POSITAL
Contact Us

The picture and drawing are for general presentation purposes only. Please refer to the "Download" section for detailed technical drawings. All dimension in [inch] mm. © FRABA B.V., All rights reserved. We do not assume responsibility for technical inaccuracies or omissions. Specifications are subject to change without notice.