Process Indicators

EDA-3700

AC, DC or True RMS measuring feature

Remote access,data collecting and controlling with Modbus RTU

Specifications

Easily changeable from front panel
5A or 60 mV AC, DC, AC/DC input
Programmable scale from 5A to 9999A
Alarm parameters
Password protection for programming mode
Having CE mark according to European Norms

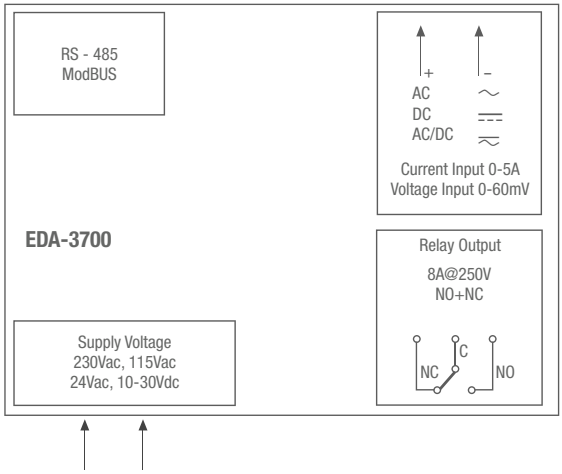

Technical Specification

Physical properties: 76 mm x 34.5 mm x71 mm Plastic for panel mounting protection. Panel section 71 x 29 mm.
Protection Class : NEMA 4X (önden IP65, arkadan Ip20).
Accuracy: Scale ±%1,
Reading frequency : According to parameter value, **Control Form:** ON/OFF
Storage / Operating Temperature :-30 °C to +80 °C / -20 °C to +70°C
Storage / Operating Humidity : 90 % max. (None condensing)
Environmental Ratings : Standard, indoor at an altitude of less than 2000 meters with none condensing humidity.
Scale : AC ve RMS 0 - 9999 / DC (-1999) - 9999
Display : 14 mm Red 4 digits LED Display

ModBus RS-485 | INPUT X1 | OUT PUT X1 | 77x35

EDA-3700 . A . 09 . D . E / 00 . 00 / 0 . 0 . 0 . 0

EDA - 3700
(76x34,5x71 mm)

Relay Output E
Alarm Output None 0
Relay Output: (8A @ 250Vac) 1

Input D
None 0
RS-485 (insulated) ModBus RTU 1

Input BC
Analog Input Type 09

A Supply Voltage
3 24Vac 50/60 Hz 1,5V
4 115Vac 50/60 Hz 1,5V
5 230Vac 50/60 Hz 1,5V
8 10 /30 Vdc