HandControl 2

Hand-held Control Unit for EasyControl Digital System

Manual

Item numbers
40-01127 … 40-01197

tams elektronik

Version: 2.0 | Status: 08/2025

Applies to all hardware and software versions of the HandControl 2 hand-held control unit.

© Tams Elektronik GmbH

All rights reserved, in particular the right of reproduction, distribution and translation. Copies, reproductions and alterations in any form require the written permission of Tams Elektronik GmbH. We reserve the right to make technical changes.

Printing the manual

The formatting is optimised for double-sided printing. The standard page size is DIN A5. If you prefer a larger display, printing on DIN A4 is recommended.

Notes on RailCom®

RailCom® is a German trademark registered in the name of Lenz Elektronik for class 9 "Electronic Controls" under number 301 16 303 and a trademark registered for classes 21, 23, 26, 36 and 38 "Electronic Controls for Model Railways" in U.S.A. under Reg.No. 2,746,080. To enhance the readability of the text, we have refrained from referring to the term each time it is used.

****Products of other manufacturers**

This manual mentions the following companies:

Gebr. MÄRKLIN & Cie. GmbH
Stuttgarter Str. 55-57 | DE-73033 Göppingen

tams elektronik

Contents

1. Getting started....1.1
1.1. Contents of the package....1.1
1.2. Accessories....1.1
1.3. Intended use....1.2
1.4. Safety instructions....1.2
1.5. Care....1.2

2. Use in the EasyControl digital system....2.1
2.1. Connection between HandControl 2 and digital central unit....2.1
2.2. Connection to the HandControl 2....2.2
2.3. Connection to the digital central unit....2.2
2.4. Extending the connection cable....2.4

3. Display and control elements of the HandControl 2....3.1

4. Setting parameters....4.1
4.1. Locomotive menu....4.4
4.1.1. Selecting a vehicle decoder from the locomotive database....4.5
4.1.2. Assigning a data format to a decoder address....4.5
4.1.3. Assigning a name to a decoder address....4.6
4.1.4. Assigning a speed dial button to a decoder address....4.6
4.1.5. Setting up the shuttle mode....4.7
4.1.6. Assigning icons to functions....4.10
4.1.7. Deleting an entry in the locomotive database....4.11
4.2. DCC programming....4.12
4.2.1. CV programming (byte-wise)....4.13
4.2.2. CV programming (bitwise)....4.13
4.2.3. Entering the basic address....4.14
4.2.4. Entering the extended address....4.14
4.2.5. Register programming....4.15
4.2.6. Main track programming....4.15
4.2.7. Reading RailCom CVs....4.16
4.3. m3 programming....4.17
4.4. Settings....4.18
4.4.1. Mode for 128 speed levels (128 SL mode)....4.18
4.4.2. Mode for the speed controller....4.19
4.4.3. S88 settings....4.19
4.4.4. Configuring boosters....4.21
4.4.5. Configuration for accessory decoders ('turnout configuration')....4.23

tams elektronik

4.4.6. Standard data format for vehicle decoders....4.25
4.4.7. Signal pause length for Motorola format....4.26
4.4.8. RailCom support....4.26
4.4.9. User name....4.27
4.4.10. Language....4.27
4.5. Setting the LCD backlight....4.28
4.5.1. Devices with a single-colour display....4.28
4.5.2. Devices with RGB display....4.28
4.6. Checking the version and serial number....4.29
4.7. Update....4.29

5. Driving mode....5.1
5.1. Basic settings....5.1
5.2. Switching the track voltage on and off....5.1
5.3. Controlling vehicle decoders....5.2
5.3.1. Active vehicle decoders....5.2
5.3.2. Selecting a vehicle decoder....5.2
5.3.3. Setting the speed....5.3
5.3.4. Setting the direction of travel....5.3
5.3.5. Switching functions on and off....5.3
5.4. Controlling accessory decoders....5.4
5.5. Shuttle mode....5.5
5.6. Double traction....5.5
5.7. Driving with multiple control units....5.6
5.8. Restarting the system (reset)....5.6

6. Update....6.1
6.1. Update with a MasterControl or RedBox....6.1
6.2. Update with a MasterControl 2 (mc²)....6.1
6.3. Starting the update mode of the HandControl 2....6.2
6.4. Update service....6.2

7. Checklist for troubleshooting....7.1
7.1. Technical hotline....7.2
7.2. Repairs....7.2

8. Technical data....8.1

9. Warranty, EC Conformity & WEEE....9.1
9.1. Warranty Statement....9.1
9.2. EC Declaration of Conformity....9.2
9.3. Declarations on the WEEE Directive....9.2

tams elektronik

1. Getting started

These instructions will help you to connect and use your HandControl 2 hand control safely and correctly. Before connecting and operating the control, read these instructions thoroughly, especially the safety instructions and the section on possible faults and how to rectify them. This will ensure that you know what to look out for and avoid mistakes that can sometimes be very costly to rectify.

Keep this manual safely so that you can solve problems in the future. If you pass the control unit on to another person, please pass on the manual with it.

1.1. Contents of the package

- HandControl 2 hand-held control unit
- Connection cable with RJ 12 and RJ 45 connectors (custom-made)

Available versions

Display colour	amber	yellow-green	red	blue	white	RGB
						Free background colour setting
Item no.	40-01127	40-01137	40-01147	40-01167	40-01177	40-01197

1.2. Accessories

Digital central unit

To use the HandControl 2, you need a digital central unit for the EasyControl system (not included):

- MasterControl, item number 40-01007 or
- RedBox, item numbers 40-02007 … 40.02067 or
- MasterControl 2 (mc²), item numbers 40-03007 … 40.03077

Make sure that all digital devices (central unit, external control units) that you operate together on the internal EasyNet data bus of the EasyControl digital system are running the latest software version. Otherwise, malfunctions may occur.

Setting up shuttle sections with s88 feedback modules

If you want to use the HandControl 2 to set up shuttle sections, you will also need an s88 feedback module. The number of inputs required for the s88 module depends on the number of shuttle sections you are setting up. Three contacts are required per shuttle section; a maximum of five shuttle sections can be controlled.

tams elektronik

Additional accessories

- Holder for HandControl 2, item numbers 40-01198 or 40-01199
- Y-distributor for patch cables (RJ 45), e.g. item number 73-80190
- Coupling for patch cables (RJ 45), e.g. item number 73-80180
- Patch cables (RJ 45) in various lengths

1.3. Intended use

The HandControl 2 hand-held control unit is designed to control digital model railway layouts in accordance with the information provided in this manual. Any other use is not intended and will void the warranty. Intended use also includes reading, understanding and following all parts of the manual. The HandControl 2 is not intended for use by children under 14 years of age.

1.4. Safety instructions

Improper use and non-observance of the instructions can lead to incalculable hazards. Prevent these dangers by carrying out the following measures:

- Use the HandControl 2 only in closed, clean and dry rooms. Avoid humidity and splash water in the environment. After condensation has formed, wait two hours for acclimatisation before use.
- Only supply the device with low voltage as specified in the technical data. Only use tested and approved transformers or power supply units for this purpose.
- Only plug the mains plug of the transformer/power supply unit into properly installed and fused sockets.
- Do not expose the device to high ambient temperatures or direct sunlight. Observe the information on the maximum operating temperature in the technical data.
- Regularly check the operational safety of the device, e.g. for damage to the connection cable or damage to the housing.
- If you notice any damage or malfunctions, switch off the power supply immediately. Send the device in for inspection.

1.5. Care

Do not use any cleaning agents to clean the HandControl 2. Only wipe the device dry. Disconnect the device from the power supply before cleaning.

tams elektronik

2. Use in the EasyControl digital system

The HandControl 2 is an external control and input device for the EasyControl digital system. It is connected to a RedBox, MasterControl or MasterControl 2 digital central unit via EasyNet (the data bus of the EasyControl digital system).

With the HandControl 2, you can

- set parameters for the EasyControl digital control system
- access the locomotive database of the connected digital central unit and enter and change the data from vehicle decoders
- control operation on the entire model railway layout, i.e. control vehicle and accessory decoders

In a digital layout controlled by a central unit for the EasyControl digital system, 63 (with RedBox) or 64 (with MasterControl 1 or 2) additional control units or adapters for the EasyNet can be used. Examples are: LokControl, HandControl, HandControl 2, mControl.

2.1. Connection between HandControl 2 and digital central unit

The HandControl 2 is connected to the digital central unit (RedBox, MasterControl or MasterControl 2) via a special cable. The cable has two different plugs:

- RJ 12 plug for connection to the HandControl 2 (the smaller one)
- RJ 45 plug for connection to the EasyNet socket of the digital central unit (the larger one)

Release locks

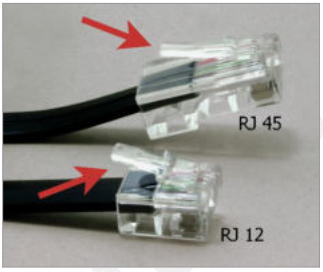

Both the RJ 12 and RJ 45 plugs have a small locking tab. This must be pressed completely onto the plug to release the lock.

> ⚠ **Never pull the cable out of the socket with force if you feel resistance!**
> **This will damage the connection socket.**

Plug and Play

You can disconnect the HandControl 2 from the central unit at any time during operation (e.g. to connect the HandControl 2 to the EasyNet at another location in the layout). As soon as the HandControl 2 is reconnected to the EasyNet, the last active vehicle decoder is shown on the display and can then be controlled immediately.

2.2. Connection to the HandControl 2

It is possible to plug the (smaller) RJ 12 plug into an RJ 45 socket on the digital central unit. However, this will bend or, in the worst case, damage the connection pins of the RJ 45 socket. The digital central unit must then be sent in for repair.

> ⚠ **Please note:**
> To prevent accidentally plugging the (smaller) RJ 12 plug into the EasyNet socket of your central unit and damaging the socket, you should always plug the RJ 12 plug into the HandControl 2 first and only then plug the RJ 45 plug into the central unit.

2.3. Connection to the digital central unit

Connection to the MasterControl 2 (mc²)

Plug the RJ 45 connector into the EasyNet socket on the front of your MasterControl 2.

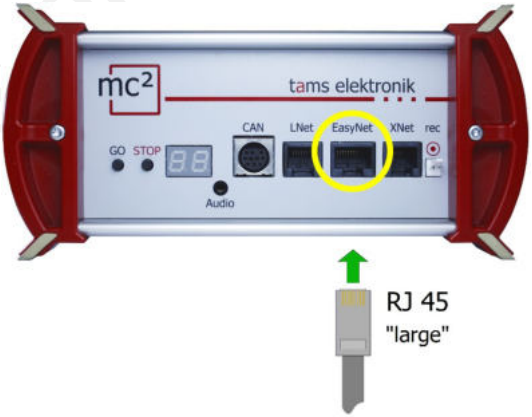

> ⚠ Make sure that you do **not (accidentally) plug the (smaller) RJ 12 plug into the EasyNet socket on your mc²**! This will bend or, in the worst case, damage the connection pins of the EasyNet socket.

> ⚠ **Also make sure that you do not plug the EasyNet cable connector into the s88-N or BiDiB interface on the rear of the mc².**
> These connections are also RJ 45 sockets. If you do so, the mc² may be damaged during commissioning.

Connection to the RedBox

Plug the RJ 45 connector into the EasyNet socket on the front of your RedBox.

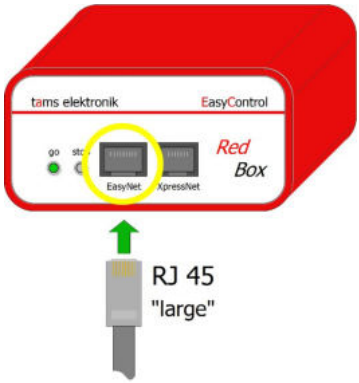

⚠ **Make sure that you do not (accidentally) plug the (smaller) RJ 12 plug into the EasyNet socket on your RedBox!**
This will bend or, in the worst case, damage the connection pins of the EasyNet socket.

⚠ **Also make sure that you do not plug the EasyNet cable connector into the s88-N interface on the rear of the RedBox, which is also designed as an RJ 45 socket.**
Doing so may damage the RedBox during commissioning.

Connection to the MasterControl

Plug the RJ 45 connector into the EasyNet socket on the back of your MasterControl.

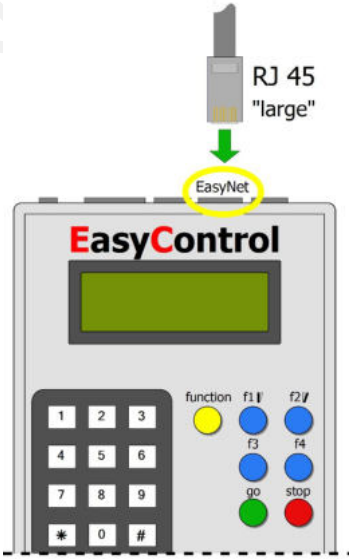

⚠ **Make sure that you do not (accidentally) plug the (smaller) RJ 12 plug into the EasyNet socket on your MasterControl!**
This will bend or, in the worst case, damage the connection pins of the EasyNet socket.

2.4. Extending the connection cable

You can extend the supplied connection cable using an RJ 45 coupling and a standard patch cable with RJ 45 connectors. Please note that longer cables are unwieldy and pose a trip hazard.

We therefore recommend installing Y-distributors for patch cables (with RJ 45 connectors) at the points in the layout where you want to use the HandControl and permanently installing the patch cables for the EasyNet between the distributors.

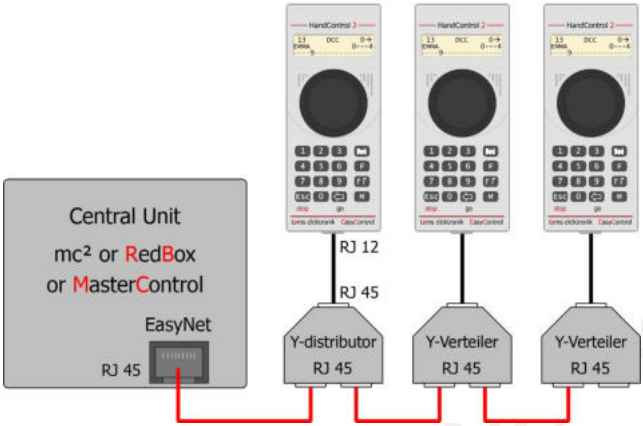

Install the Y-distributors at the points in your layout where you want to use HandControl(s) or other central units. You can connect and use several external control units at different points in the layout at the same time.

tams elektronik

3. Display and control elements of the HandControl 2

1 Display

The three-line display has 16 characters per line. All information is shown on the display during operation and while the parameters are being set. The brightness (and colour on RGB displays) can be adjusted individually.

2 Rotary knob / speed controller

You can turn the speed control knob continuously in both directions. When turning, the knob locks into place in steps. A button is integrated into the speed control knob. Pressing the button confirms an entry or changes the direction during operation.

3 Digit keys 0 to 9

Function area

4	**Locomotive key**	With these keys you can 'toggle', i.e. switch the function areas on and off with the key. ausschalten.
5	**Function key**	
6	**Turnout key**	
7	**Menu key**	

8 Esc and stop key

To trigger a 'STOP' during driving, the button must be pressed a little longer (approx. 0.5 seconds).

9 ⇦ and go key

The button is also used to confirm entries ('Ret').

10 RJ12 connection socket

Switching between 2-line and 3-line display

For driving mode, you can switch the display to a 2-line display. The decoder address, data format, active speed level and direction of travel are then displayed in larger characters. To switch, press the button [ ] and then the [M] button.

tams elektronik

4. Setting parameters

Navigating the menu

The parameters of the digital control and the HandControl 2 are set in a menu that you can access by pressing the [M] button. When you access the menu for the first time after switching on, 'Loco menu' appears on the display, otherwise the menu item that was active before you left the menu. An arrow in the upper left corner of the display indicates which actions are possible:

↕	To another menu item in the same menu level or to the next lower / next higher menu level
↵	Making entries or making changes to the existing settings
no arrow	Display of the current (stored) setting

To navigate through the various menu levels and to the individual menu items, use the [Esc] and the [⇦] key and the speed controller. Note: If the [Esc] key is held down a little longer (approx. 0.5 seconds), the track voltage for the layout is switched off (= stop) → Section 5.2.

To confirm entries, you can either

- press the [⇦] button or
- press the speed controller ● ↓

Display	Action	Control element
	Call up/exit the menu	Press [M]
↕	Move in the menu (on the same menu level)	Turn the speed controller ● ↻ or ● ↺
↕	Switch to the next lower menu level	Press [⇦] or ● ↓ (speed controller)
↕	Move to the next higher menu level	Press [Esc]
↵	Select a value	● ↻ or ● ↺ (turn the speed controller)
↵	Enter a number	[1] [2] [3] [4] [5] [6] [7] [8] [9] [0] Note: In some menu items, not all numbers are valid input values.
↵	Enter a character (upper and lower case letters, numbers, special characters)	Turn the speed controller ● ↻ or ● ↺ After confirming with [⇦] or ● ↓ , the cursor automatically jumps to the next input field. To exit the input, press [Esc] .
↵	Confirm entries and exit menu item	Press [⇦] or ● ↓ (speed controller)
↵	End or cancel input	Press [Esc]

tams elektronik

Menu structure

Note: The numbers refer to the corresponding sections of the instructions.

Main menu	Submenu 1	Submenu 2
Locomotive menu → 4.1.	Select → 4.1.1.	
	Data format → 4.1.2.	
	Name → 4.1.3.	
	Speed dial → 4.1.4.	
	Shuttle mode → 4.1.5.	Activate / Speed / Functions / Contacts / Hold time 1, 2 and 3
	Fx <-> Icon → 4.1.6.	
	Entry (delete) → 4.1.7.	
DCC programming → 4.2.	CV (byte) → 4.2.1.	
	CV (bit) → 4.2.2.	
	Basic address → 4.2.3.	
	Extended address → 4.2.4.	
	Register → 4.2.5.	
	Main track → 4.2.6.	
	RailCom CV → 4.2.7.	
m³ programming → 4.3.	m³ address	
Settings → 4.4.	Mode for 128 speed levels (128 SL mode) → 4.4.1.	
	Controller mode → 4.4.2.	
	s88 settings → 4.4.3.	S-88 modules S-88 module test
	Boosters / configuration → 4.4.4.	Short circuit polarity Short circuit sensivity
	Turnouts / configuration → 4.4.5.	All turnouts Turnout format
	Loco format → 4.4.6.	
	MM signal pause → 4.4.7.	
	RailCom support → 4.4.8.	
	User name → 4.4.9.	
	Language → 4.4.10.	

tams elektronik

Main menu	Submenu 1	Submenu 2
LCD backlight → 4.5.	LCD backlight	
Version and serial number → 4.6.		
Update → 4.6.		

Digit = Speed dial

When navigating through the main menu level, '*Digit = Speed dial*' appears briefly on the display when changing to a new menu item. This indicates that it is possible to return to driving mode at any time from this menu level (even if '*Digit = Speed dial*' is hidden). Pressing a digit key selects the locomotive to be controlled:

0	Locomotive that was last active (before the menu button was pressed)
1 2 … 9	Locomotive to which the relevant speed dial is assigned More about 'Speed dial' → Section 4.1.4.

Basic settings on delivery

Most of the parameters that can be set using the HandControl 2 are stored in the central unit (MasterControl , MaterControl 2 or RedBox) and can also be edited with other input devices. Only the following parameters relate exclusively to the HandControl 2 and are stored in the HandControl 2:

Parameter	On delivery	Change in Menu item
Shuttle mode	off	Locomotive menu / Shuttle mode → 4.1.5.
Mode für 128 speed levels	Native 1:1	Settings / 128 SL mode → 4.4.1.
Mode for speed controller	AC mode	Settings / Controller mode → 4.4.2.
Backlight	15	Settings / LCD backlight → 4.5.

4.1. Locomotive menu

The Locomotive menu gives you access to the locomotive database of the digital central unit (MasterControl, MasterControl 2 or RedBox). In the locomotive database, you can assign the following parameters to the addresses of your vehicle decoders:

- Data format and number of speed levels
- Name (max. 11 letters)
- Speed dial (a digit between 1 and 9 that you can use to call up the vehicle decoder)
- Shuttle mode
- Icons for the functions

Call up decoder address

In the Locomotive menu, you can edit the parameters of the vehicle decoder whose address was shown on the display before you called up the menu. Call up a decoder as follows:

- Press the button [ ]
- Enter the decoder address using the number keys and confirm with [⇦] or ● ↓

When you call up a decoder address for the first time, the default settings (→ Section 4.1.2.) are automatically assigned to it.

If you have already created a vehicle decoder (and want to change the parameters), you can also call it up by

- pressing [M] and entering the speed dial using the number keys (if you have assigned a speed dial to the decoder
- pressing [M] and then selecting the decoder from the locomotive database via the 'Select' menu item

Note: After entering the speed dial or selecting from the locomotive database, the HandControl 2 automatically switches to driving mode. To make settings in the Locomotive menu, you must press [M] again.

Calling up the Locomotive menu

Press the [M] button and call up the '*Locomotive menu*' menu item in the main menu. Please note: If you have already selected a menu item, pressing the [M] button will return you to this menu item. You may therefore need to use [Esc] to switch from a submenu level to the main menu level.

↥ *Locomotive menu*	[⇦] or ● ↓	To submenu level 1
	● ↻ or ● ↺	To another item in the main menu
	[Esc] or [M]	Back to driving mode

tams elektronik

In the submenu level, you can:

- search the locomotive database and select a decoder
- assign parameters to the vehicle decoders (data format, number of speed levels, name, shuttle mode and icons for the functions) or change saved parameters and save the entries in the locomotive database
- assign speed dial keys to the vehicle decoders
- delete entries from the locomotive database

4.1.1. Selecting a vehicle decoder from the locomotive database

↕ Select

⇦ or ● ↓	To the locomotive database
● ↻ or ● ↺	To another item in submenu 1
Esc | M	Back to submenu 1 | to driving mode

↵ Select 200
Name: V200
Fmt: DCC 128

⇦ or ● ↓	Confirm selection
● ↻ or ● ↺	Search locomotive database
Esc | M	Back to submenu 1 | to driving mode

4.1.2. Assigning a data format to a decoder address

↕ Data format
200: DCC 128

The display shows the current settings (for new decoders, the default settings).

⇦ or ● ↓	To set the data format and speed levels
● ↻ or ● ↺	To another item in submenu 1
Esc	Back to main menu
M	Back to driving mode

↵ Data format
200: DCC 128

⇦ or ● ↓	Confirm selection
● ↻ or ● ↺	Change parameters Possible settings: DCC 14, 28 or 128 speed levels m3 128 speed levels MM 1 14, 27a or 27b speed levels MM 2 14, 27a or 27b speed levels
Esc | M	Back to submenu 1 | to driving mode

tams elektronik

4.1.3. Assigning a name to a decoder address

↕ Name 200
V200

The display shows the current name, if already assigned.

⇦ or ● ↓	To set the name
● ↻ or ● ↺	To another item in submenu 1
Esc	Back to main menu
M	Back to driving mode

↵ Name 200
V200

⇦ or ● ↓	Confirm selection for the highlighted character
● ↻ or ● ↺	Select a letter, number or special character and confirm your selection. You must confirm your selection for all 11 fields (including spaces, if applicable). After confirming the last field, the display automatically returns to submenu 1. To correct entries, you must call up the menu item again.
Esc | M	Back to submenu 1 | to driving mode

4.1.4. Assigning a speed dial button to a decoder address

To enable quick access to specific vehicles, you can assign vehicle decoders to the number buttons 1 to 9 as speed dial buttons. You can also assign several speed dial buttons to a vehicle decoder. The assignment of speed dial buttons is only valid for the respective device. The number key 0 cannot be assigned to a specific decoder as a speed dial key. It is used to switch to the previously active decoder.

↕ Speed dial

⇦ or ● ↓	Assigning the speed dial key
● ↻ or ● ↺	To another item in submenu 1
Esc | M	Back to the main menu | to driving mode

↵ Speeddial : 7
Save active decoder

Display:
Selected memory location

⇦ or ● ↓	Confirm selection
1 2 3 4 5 6 7 8 9 0	Select speed dial button If you assign a speed dial button to a decoder that has already been used for another decoder, the old assignment is deleted.
Esc | M	Back to submenu 1 | to driving mode

tams elektronik

4.1.5. Setting up the shuttle mode

Up to five different shuttle sections can be set up in a layout controlled by a RedBox, MasterControl or MasterControl 2. Each HandControl 2 controls the shuttle service on the section assigned to it. With 2, 3, 4 or 5 HandControl 2 control units, up to 5 different shuttle sections can therefore be controlled.

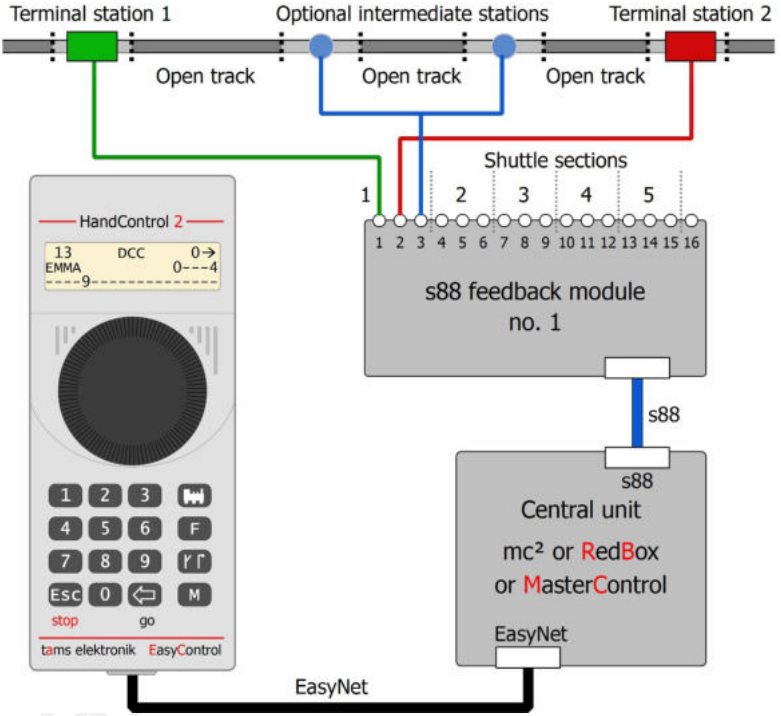

To use the shuttle mode, an s88 module must be connected to the s88 interface of the central unit (RedBox, MasterControl or MasterControl 2).

Each shuttle section is assigned a group of three inputs of the first s88 module connected to the central unit. The direction of travel of the locomotive is set depending on which of the inputs in a group of three is triggered:

Shuttle section	**1**	**2**	**3**	**4**	**5**	**Continue in direction of travel**
Contact	1	4	7	10	13	'forward'
Contact	2	5	8	11	14	'reverse'
Optional contact	3	6	9	12	15	no change of direction

Note: Inputs of the first s88 module that are not required for shuttle mode can be used for other applications.

Procedure

The automatic shuttle mode can be activated and deactivated using the HandControl 2. When the first two contacts of a group of three are triggered, the locomotive's direction of travel is set to 'forward' or 'reverse'. A third contact can be connected to trigger (any number of) intermediate stops.

To ensure that the s88 contacts are triggered reliably, the travel time on the free section between the stopping sections must be at least 2 seconds.

Setting options

The settings apply to the locomotive that was active before the shuttle section was set up. The following can be set:

- individually for each of the three intermediate stations: Holding time (1 second to 18.2 hours)
- for the entire shuttle section: Active functions
- the maximum speed

↕ Shuttle mode	⇦ or ● ↓	For setting the automatic shuttle mode Note: The settings apply to the locomotive that was active before the shuttle section was set up.
	● ↻ or ● ↺	To another item in submenu 1
	Esc | M	Back to the main menu | to driving mode

Activating the automatic shuttle mode

You can only make or save settings if the automatic shuttle service has been activated.

↵ Shuttle mode *Activate* *active*	⇦ or ● ↓	To (de)activate the automatic shunting function, then: - activate / deactivate by turning the speed controller ● ↻ or ● ↺ - confirm selection with ⇦ or ● ↓
	● ↻ or ● ↺	To another item in submenu 2
	Esc | M	Back to submenu 1 | to driving mode

tams elektronik

Set maximum speed

↵ Shuttle mode
Speed
13

⇦ or ● ↓	To set the (maximum) speed, then: - select the speed level by turning the speed controller ● ↻ or ● ↺ - confirm your selection with ⇦ or ● ↓
● ↻ or ● ↺	To another item in submenu 2
Esc | M	Back to submenu 1 | to driving mode

Activating and deactivating functions

↵ Shuttle mode
Functions
✳✳ · ✳ · · · · ·

Active functions in the example:
f0 f1 f2 f3 f4 f5 f6 f7 f8

⇦ or ● ↓	To select the functions 1 2 3 then: activate / deactivate 4 5 6 functions for shuttle service using 7 8 9 the number keys 0
● ↻ or ● ↺	To another item in submenu 2
Esc | M	Back to submenu 1 | to driving mode

Assign contacts of the s88 feedback device

↵ Shuttle mode
Contacts
10-12

⇦ or ● ↓	To assign the contacts, then: - select contacts by turning the speed controller ● ↻ or ● ↺ - confirm your selection with ⇦ or ● ↓
● ↻ or ● ↺	To another item in submenu 2
Esc | M	Back to submenu 1 | to driving mode

Setting holding times

↵ Shuttle mode
Hold time 1
38 sec

Note: The holding time is set individually for each of the 3 contacts.

Holding time 1 = terminal station 1
Holding time 2 = terminal station 2
Holding time 3 = intermediate stop(s)

⇦ or ● ↓	To set the holding time 1, then: - set the holding time by turning the drive conntroller ● ↻ or ● ↺ - confirm your selection with ⇦ or ● ↓
● ↻ or ● ↺	To another item in submenu 2 (e.g. to set the holding time for the other two contacts)
Esc | M	Back to submenu 1 | to driving mode

tams elektronik

4.1.6. Assigning icons to functions

During operation, the active functions are shown on the display by the corresponding numbers. As an alternative to displaying the numbers, you can assign icons to the functions to show their status.

	on	off
Light	✳	o
Shunting gear	½	|
Acceleration and brake delay	◿	⌋
Current-conducting coupling	ϟ	–
Decoupler / Telex	⊤	_
Smoke	¶	Π
Sound	🔈	K

↥ Fx <-> Icon

⇦ or ● ↓	To assign the function icons
● ↻ or ● ↺	To another item in submenu 1
Esc | M	Back to main menu | to driving mode

Step 1: Select function

↵ Fx <-> Icon
F0 : K

● ↻ or ● ↺	Select function
⇦ or ● ↓	Confirm selection
Esc | M	Back to submenu 1 | to driving mode

Step 2: Select icon

↵ Fx <-> Icon
F0 : K

● ↻ or ● ↺	Select icon Notes: Only the symbol for 'Function off' is displayed. '·' means that no symbol is used.
⇦ or ● ↓	Confirm selection
Esc | M	Back to submenu 1 | to driving mode

tams elektronik

4.1.7. Deleting an entry in the locomotive database

↕ Entry 200 *←=delete*	⇦ or ● ↓	To delete the entry
	● ↻ or ● ↺	To another item in submenu 1
	Esc | M	Back to main menu | to driving mode

↵ =delete 200	⇦ or ● ↓	Confirm deletion
	Esc | M	Back to submenu 1 | to driving mode

tams elektronik

4.2. DCC programming

Programming modes

The HandControl 2 allows you to read and change the stored values of the decoder using various DCC programming modes:

- CV programming – byte-by-byte and bit-by-bit
- Register programming

Main track programming is a type of byte-by-byte CV programming that allows you to program the vehicle directly on the main track. Main track programming is only possible for the last locomotive address called up and only for one CV variable at a time. After changing a variable, the HandControl 2 automatically exits programming mode and returns to driving mode. The set value is not read out with this programming type.

Please note: The DCC decoders are designed for specific types of programming. Please refer to the decoder instructions to find out which types of programming are possible.

Changing the decoder address

The decoder address can be changed quickly and easily using the submenu items 'Basic address' and 'Extended address'. After entering the address via these menu items, the central unit automatically assigns the correct values to CV variables 1 and 29 or 17, 18 and 29.

Programming DCC vehicle decoders

To program a locomotive or function decoder for the DCC format, place the vehicle on the DCC programming track (exception: main track programming). You can then select different programming types for the DCC format.

↥ *DCC programming*	⇦ or ● ↓	To DCC programming
	● ↻ or ● ↺	To another item in the main menu
	Esc and M	Back to driving mode

tams elektronik

4.2.1. CV programming (byte-wise)

↕ CV (byte)

⇦ or ● ↓	For reading/changing CV values
● ↻ or ● ↺	To another item in submenu 1
Esc | M	Back to the main menu | to driving mode

↵ CV (byte)
1: 66
Basic address

Note: If required by RCN standard 225, the use of the CV is specified in the third line.

● ↻ or ● ↺	Switch between CV number and CV value	
	1 2 3 4 5 6 7 8 9 0	Step 1: Enter the CV number using the keypad, confirm with ⇦ or ● ↓ and read out the CV value. Step 2: Enter the CV value using the keypad, confirm with ⇦ or ● ↓ and write the CV value.
Esc | M	Back to submenu 1 | to driving mode	

4.2.2. CV programming (bitwise)

↕ CV (bit)

⇦ or ● ↓	For reading/changing CV values
● ↻ or ● ↺	To another item in submenu 1
Esc | M	Back to the main menu | to driving mode

↵ CV (bit)
CV: 1 Bit: 1=1

● ↻ or ● ↺	Switch between CV number, bit number and bit value	
	1 2 3 4 5 6 7 8 9 0	Step 1: Enter the CV number using the keypad, confirm with ⇦ or ● ↓ and read out the CV value. Step 2: Enter the bit number using the keypad, confirm with ⇦ or ● ↓ and read out the bit value. Step 3: Enter the bit value using the keypad, confirm with ⇦ or ● ↓ and write the bit value.
Esc | M	Back to submenu 1 | to driving mode	

tams elektronik

4.2.3. Entering the basic address

↕ Basic address	⇦ or ● ↓	To read in / change the basic address
	● ↻ or ● ↺	To another item in submenu 1
	Esc | M	Back to the main menu | to driving mode

↵ Basic address *Adr. : 1*	The current basic address is read out and displayed.		
		1 2 3 4 5 6 7 8 9 0	Enter the new address using the keypad and confirm with ⇦ or ● ↓ .
	Esc | M		Back to submenu 1 | to driving mode

4.2.4. Entering the extended address

↕ Extend. address	⇦ or ● ↓	To read in / change the extended address
	● ↻ or ● ↺	To another item in submenu 1
	Esc | M	Back to main menu | to driving mode

↵ Extend. address *Adr. : 9999*	The current extended address is read out and displayed.		
		1 2 3 4 5 6 7 8 9 0	Enter the new address using the keypad and confirm with ⇦ or ● ↓ .
	Esc | M		Back to submenu 1 | to driving mode

tams elektronik

4.2.5. Register programming

↕ Register

⇦ or ● ↓	For reading/changing the registers
● ↻ or ● ↺	To another item in submenu 1
Esc | M	Back to main menu | to driving mode

↵ Register
Reg 1: 0

● ↻ or ● ↺	Switch between the register number and the value of the register	
	1 2 3 4 5 6 7 8 9 0	Step 1: enter the register number using the keypad, confirm with ⇦ or ● ↓ and read out the value. Step 2: enter the register value using the keypad, confirm with ⇦ or ● ↓ and write the value.
Esc | M	Back to submenu 1 | to driving mode	

4.2.6. Main track programming

↕ Main track
DCC only!

⇦ or ● ↓	For reading/changing CV values
● ↻ or ● ↺	To another item in submenu 1
Esc | M	Back to main menu | to driving mode

↵ Main track
CV 1: 36
address (short)

● ↻ or ● ↺	Switch between CV number and CV value	
	1 2 3 4 5 6 7 8 9 0	Step 1: enter the CV number using the keypad Step 2: enter the CV value using the keypad, confirm with ⇦ or ● ↓ .
Esc | M	Back to submenu 1 | to driving mode	

tams elektronik

4.2.7. Reading RailCom CVs

With the HandControl 2, you can trigger the reading of CVs via the RailCom® feedback standard. The CV values are not displayed on the HandControl 2. Special RailCom devices are required to display the read data.

↕ RailCom CV
DCC only!

⇦ or ● ↓	To read the CV
● ↻ or ● ↺	To another item in submenu 1
Esc | M	Back to main menu | to driving mode

↵ RailCom CV
CV 1
address (short)

● ↻ or ● ↺	Select CV number
⇦ or ● ↓	Confirm entry
Esc | M	Back to submenu 1 | to driving mode

tams elektronik

4.3. m3 programming

With the HandControl 2, you can assign an address to mfx vehicle decoders on the DCC programming track and then control them in m3 format. Note: Automatic registration of mfx vehicle decoders with the digital central unit is not possible in the EasyControl digital system.

↕ m3-programmg.	⇦ or ● ↓	To m3 programming
	● ↻ or ● ↺	To another item in the main menu
	Esc | M	Back to driving mode

↕ m3-address	⇦ or ● ↓	To program the m3 address
	Esc | M	Back to main menu | to driving mode

↵ m3-address *0* *UID: 0x0*	1 2 3 4 5 6 7 8 9 0	Enter the new address using the keypad and confirm with ⇦ or ● ↓ . The UID is read and then the address is written. Note: Reading the UID can take a very long time!
	Esc | M	Back to main menu | to driving mode

Note on handling mfx vehicle decoders

Reading the specific identification number of a vehicle decoder (UID) on the DCC programming track can take quite some time. Therefore, we recommend the following procedure:

- With RedBox and MasterControl: Write down the UID and assign the address to the mfx vehicle decoders using the CV Navigator.
- With MasterControl 2: In the Toolbox (the mc² web interface), under the menu item 'Operation/Programming', you can read the UID of mfx vehicle decoders on the programming track and assign them an address.

Background: When used in layouts controlled by mfx central units, a vehicle decoder is assigned an address that is only valid for this layout when it is used for the first time, and this address is stored in the decoder. As a result, vehicles that have been used on mfx layouts in the meantime must always be assigned an address before they can be used again on the EasyControl-controlled layout.

tams elektronik

4.4. Settings

This menu item is used to set various parameters for operating the HandControl 2 and controlling external digital components:

- Mode for 128 speed levels
- Controller mode
- s88 setting: Number of connected s88 feedback modules. You can also check the connected s88 feedback modules in this menu item.
- Booster configuration: Short-circuit polarity and sensitivity of the connected boosters
- Turnout configuration: Data format of the solenoid accessory decoders
- Locomotive format: Standard data format of the locomotive and function decoders. You can assign a different format to each individual decoder in the locomotive menu.
- MM signal pause: Length of the signal pause for signals in Motorola format
- RailCom support: You determine whether and how the digital control supports RailCom.
- User name
- Language

4.4.1. Mode for 128 speed levels (128 SL mode)

In speed mode 128 (in DCC format and in m3 format, not in MM format), the speed level is changed by one when the speed controller is turned to the next detent position (native 1:1). In Linear 2:1, the speed level is changed by two when the speed control is turned to the next detent. In addition, there are two modes to choose from, which select the speed level in smaller steps in the lower speed range and in larger steps in the upper speed range.

Native 1:1	all speed levels: 1:1		
Linear 2:1	all speed levels: 2:1		
Progressive 1	Speed level 0-20: 1:1	Speed level 20-62: 2:1	Speed level 62-126: 4:1
Progressive 2	Speed level 0-10: 1:1	Speed level 10-22: 2:1	Speed level 22-126: 4:1

↕ 128 SL Mode
Native (1:1)

⇦ or ● ↓	To change the speed mode
● ↻ or ● ↺	To another item in submenu 1
Esc | M	Back to the main menu | to driving mode

Display: set mode

↵ 128 SL Mode
Native (1:1)

● ↻ or ● ↺	Select speed mode
⇦ or ● ↓	Confirm entry
Esc | M	Back to submenu 1 | to driving mode

tams elektronik

4.4.2. Mode for the speed controller

Depending on the controller mode set, turning and pressing the speed controller has different effects:

AC controller mode:

- Increase the speed level by turning the speed controller to the right (for forward and reverse travel).
- Change the direction of travel only by pressing the speed controller. Note: Pressing the speed controller (change of direction of travel) sets the speed level to 0.
- Turning the controller to the left from the 0 setting: no effect.

DC controller mode:

- Increase the speed level when travelling forwards by turning the speed controller to the right, and when travelling backwards by turning the speed controller to the left.
- Change the direction of travel when passing through speed level 0. Pressing the speed controller sets the speed level to 0.

↕ Controller mode DC Mode

Display:
Set controller mode

⇦ or ● ↓	To change the controller mode
● ↻ or ● ↺	To another item in submenu 1
Esc	Back to the main menu
M	Back to driving mode

↵ Controller mode DC Modus

● ↻ or ● ↺	Select controller mode
Esc	Accept entry and return to submenu 1
M	Back to driving mode

4.4.3. S88 settings

↕ s88 settings

⇦ or ● ↓	To change the settings, then to set the number of s88 modules or to test the s88 module with ● ↻ or ● ↺
● ↻ or ● ↺	To another item in submenu 1
Esc	Back to the main menu
M	Back to driving mode

tams elektronik

Enter the number of connected s88 modules:

The number of connected s88 modules must be set correctly so that the messages from all connected modules are transmitted correctly from the digital central unit (RedBox, MasterControl or MasterControl 2) to the PC.

↕ s88 modules:
5

Display:
Number of s88 modules

⇦ or ● ↓	To change the number of s88 modules
● ↻ or ● ↺	Set the number of s88 modules (max. 52) and confirm entry with ⇦ or ● ↓
Esc	Back to submenu 1
M	Back to driving mode

S88 module test

The central unit queries the states of the inputs of the s88 module one after the other. The states of inputs 1 to 8 are shown in the upper line, those of inputs 9 to 16 in the lower line:

□ = free

■ = occupied

The central unit repeats the status query continuously. You can switch between continuous and static queries using the F key.

In **continuous query** mode, the current status of the inputs is displayed. This type of query is useful, for example, to check whether new s88 modules are functioning correctly.

In **static query** mode, inputs that have already been reported as occupied continue to be displayed as occupied – even if they have become free in the meantime. This allows you to detect very short (possibly faulty) occupancy signals. To update the display, press the 0 key. Note: Before performing a static query, the Shuttle mode must be deactivated.

Differences between the display and the actual status of an input indicate problems with the s88 bus, faults in the s88 module or in components connected to the s88 module.

↵ s88 module test
No.: 4 □□□■□□□□
F→cont. □□□□□□■□

Display:
Free and occupied inputs (occupied inputs = No. 4 and No. 15).
The query is performed continuously.

● ↻ or ● ↺	Select the number of the s88 module to be tested. The test starts immediately.
F	To switch between continuous and static query
0	To update the display during static query
Esc	Back to submenu 1
M	Back to driving mode

tams elektronik

4.4.4. Configuring boosters

↕ Booster Configuration

⇦ or ● ↓	To the booster configuration
● ↻ or ● ↺	To another item in submenu 1
Esc	Back to the main menu
M	Back to driving mode

Setting the short-circuit polarity

The RedBox and MasterControl digital central units can be operated with both DCC-compliant and Märklin**-compatible boosters. The two types of boosters cannot be mixed. The short-circuit polarity must be set to match the booster type, otherwise the central unit will not be able to switch off the boosters in the event of a short circuit.

- for DCC-compliant boosters: negative
- for Maerklin**-compatible boosters: positive

Note: When using the MasterControl 2 (mc²) as a digital central unit, the boosters are configured using the central unit's Toolbox. The short-circuit polarity set with the HandControl 2 has no effect in this configuration.

↕ Sh.circ.polar. negative (DCC)

Display:
Set short-circuit polarity

⇦ or ● ↓	To set the short-circuit polarity
● ↻	To set the short-circuit sensitivity
Esc	Back to submenu 1
M	Back to driving mode

↵ Sh.circ.polar. negative (DCC)

Display:
Set short-circuit polarity

● ↻ or ● ↺	Set short-circuit polarity (positive or negative)
⇦ or ● ↓	Confirm entry
Esc	Back to submenu 2 without applying the setting
M	Back to driving mode

tams elektronik

Setting the short-circuit sensitivity

The lower the value set, the faster the short-circuit detection reacts and the booster outputs are switched off. Note: If the value is set very high, welding points may occur on the rails in the event of a short circuit (especially with powerful boosters).

↕ Sh.circ.sensiv.
130 ms

Display:
Set Short-circuit sensitivity

⇦ or ● ↓	To set the short-circuit sensitivity
● ↺	To set the short-circuit polarity
Esc	Back to submenu 1
M	Back to driving mode

↵ Sh.circ.sensiv.
130 ms

Display:
Set Short-circuit sensitivity

● ↻ or ● ↺	Short-circuit sensitivity: increase (set to a lower value) or decrease (set to a higher value)
⇦ or ● ↓	Confirm entry
Esc	Back to submenu 2 without accepting the setting
M	Back to driving mode

tams elektronik

4.4.5. Configuration for accessory decoders ('turnout configuration')

The data format for the accessory decoders is set either

- for all accessory decoders ('all turnouts') or
- individually for each group of 4 accessory decoders (turnout addresses 1-4, 5-8, 9-12, etc.)

Please note: If you change the data format for all accessory decoders (all turnouts), all entries for individual accessory decoders will be overwritten.

↕ Turnouts Configuration	⇦ or ● ↓	To configuration of accessory decoders (turnout configuration)
	● ↻ or ● ↺	To another item in submenu 1
	Esc	Back to the main menu
	M	Back to driving mode

Configure all accessory decoders

↕ All turnouts	⇦ or ● ↓	To configure **all** accessory decoders
	● ↻	To configure **individual** accessory decoders
	Esc	Back to submenu 1
	M	Back to driving mode

↵ All turnouts DCC	● ↻ or ● ↺	Switch between DCC and Motorola format
	⇦ or ● ↓	To save the setting, you must confirm the entry. Please note: The setting will be applied to **all** accessory decoders!
	Esc	Back to submenu 2 without changing the data format for the accessory decoders.
	M	Back to driving mode

tams elektronik

Configuring individual accessory decoders

↕ Format *1- 4: DCC*	⇦ or ● ↓	To configure **individual** accessory decoders
	● ↺	To configure **all** accessory decoders
	Esc	Back to submenu 1
	M	Back to driving mode

↵ Format *1- 4: DCC* *1 (1 - 4)*	● ↻ or ● ↺	Switch between entering the turnout address and the digital format	
		1 2 3 4 5 6 7 8 9 0	Enter a turnout address for a group of four using the keypad (e.g. 59 for group 57-60) and confirm with ⇦ or ● ↓ .
↵ Format *57- 60: DCC* *1 (1 - 4)*	● ↻ or ● ↺	Switch between entering the turnout address and the digital format	
		Use ⇦ or ● ↓ to switch between DCC and MM formats.	
	Esc	Confirm entry and return to submenu 2	
	M	Back to driving mode	

tams elektronik

4.4.6. Standard data format for vehicle decoders

The setting is adopted as the default setting for all locomotive and function decoders.

- for addresses ≤ 255: Motorola (14 speed levels) or DCC (28 speed levels)
- for addresses > 255: DCC (28 speed levels)

Using the Locomotive menu, you can assign a data format that differs from the default setting and/or a different number of speed levels to vehicle decoders and save them in the locomotive database of the digital central unit (RedBox, MasterControl or MasterControl 2). Changes to the standard data format have no effect on the settings in the locomotive database..

↕ Loco Format
DCC

Display: Set standard data format for vehicle decoders with addresses up to 255

⇦ or ● ↓	To set the standard format for vehicle decoders
● ↻ or ● ↺	To another item in submenu 2
Esc	Back to the main menu
M	Back to driving mode

↵ Loco Format
DCC

● ↻ or ● ↺	Select standard format (DCC or Motorola)
Esc	Back to submenu 1
M	Back to driving mode

tams elektronik

4.4.7. Signal pause length for Motorola format

This setting only applies to vehicle decoders that are controlled in Motorola format. We recommend setting the short signal pause (1.5 ms). Only if problems occur during operation with Motorola I decoders you should set the long signal pause (4.025 ms).

↕ MM signal pause
short: 1.5 ms

Display: set length of MM signal pause

⇦ or ● ↓	To set the MM signal pause
● ↻ or ● ↺	To another item in submenu 2
Esc	Back to the main menu
M	Back to driving mode

↵ MM signal pause
short: 1.5 ms

● ↻ or ● ↺	MM signal pause (short or long)
Esc	Back to submenu 1
M	Back to driving mode

4.4.8. RailCom support

This setting determines whether and how the digital control supports the RailCom feedback standard:

0: RailCom off. If you switch off RailCom support for the EasyControl system, you should also switch off RailCom support on all connected boosters.

1: Tailbits. Space is left for the RailCom gap during data transmission. You can use this setting if you are not using any RailCom-compatible accessory decoders in your digital layout.

2: + IdNotify. The central unit regularly transmits its ID (in addition to tailbits). There is currently no application for this setting.

3: + Accessory. The central unit regularly sends a turnout command to enable feedback from turnout decoders. (In addition to Tailbits and IdNotify). This is the default setting when RailCom is used in the digital layout.

↕ RailCom support
0: Off

Display: RailCom support setting

⇦ or ● ↓	To set the RailCom support
● ↻ or ● ↺	To another item in submenu 2
Esc	Back to the main menu
M	Back to driving mode

↵ RailCom support
0: Off

● ↻ or ● ↺	Select RailCom support (0, 1, 2 or 3)
Esc	Back to submenu 1
M	Back to driving mode

tams elektronik

4.4.9. User name

You can assign a user name (max. 16 characters) to your HandControl 2. This allows you to identify your device, e.g. when using it in a model railway club.

↕ User name
tams elektronik1

Display: Set user name

⇦ or ● ↓	To set the user name
● ↻ or ● ↺	To another item in submenu 2
Esc	Back to the main menu
M	Back to driving mode

↵ User name
tams elektronik1

⇦ or ● ↓	Confirm selection for the highlighted character
● ↻ or ● ↺	Select letter, number or special character and confirm selection You must confirm the selection for all 16 fields (space if necessary). After confirming the last field, the display automatically returns to submenu 2. To correct entries, you must call up the menu item again.
Esc	Back to submenu 1
M	Back to driving mode

4.4.10. Language

You can set the language used for the HandControl 2 display.

↕ Language
English

Display:
set language

⇦ or ● ↓	To set the language
● ↻ or ● ↺	To another item in submenu 2
Esc	Back to the main menu
M	Back to driving mode

↵ Language
English

● ↻ or ● ↺	Select language The setting takes effect immediately.
Esc	Back to submenu 1
M	Back to driving mode

tams elektronik

4.5. Setting the LCD backlight

4.5.1. Devices with a single-colour display

↕ LCD backlight	⇦ or ● ↓	To set the LCD backlight
	● ↻ or ● ↺	To another item in the main menu
	Esc or M	Back to driving mode

↵ LCD backlight 5	● ↻ or ● ↺	Decrease or increase brightness The setting is applied immediately.
	Esc	Back to the main menu
	M	Back to driving mode

4.5.2. Devices with RGB display

With the HandControl 2 with RGB display, the colour and brightness of the display can be individually set for the operating states 'stop', 'go' and 'short circuit'. For the 'Menu' area, the colour and brightness are fixed to a dark blue.

↕ LCD backlight	⇦ or ● ↓	To set the LCD backlight
	● ↻ or ● ↺	To another item in the main menu
	Esc or M	Back to driving mode

↵ LCD backlight 5 4=S 5=g 6=k 1=B 2=g 3=r	● ↻ or ● ↺	Decrease or increase the brightness for an operating status (here 'stop') and a colour (here blue). The setting is implemented immediately.	
		1 2 3 4 5 6 7 8 9 0	Select the operating status and colour to be set using the number keys. Active operating statuses and colours (= selected for editing) are indicated by capital letters. Note:You can 'mix' the colours for the three operating states from the three RGB colours.
	Esc	Back to the main menu	
	M	Back to driving mode	

Assigning the number keys to the operating states:

4 S = stop
(active in the example)

5 g = go

6 k = short circuit

Assigning the number keys to the colours:

1 B = blue
(active in the example)

2 g = green

3 r = red

tams elektronik

4.6. Checking the version and serial number

↕ HandControl V2
EC = V2.1.0
HW=15 SW= 2.1.0

Display:	
1st line:	Device type (HandControl 2)
2nd line:	Required software version of the devices in EasyNet
3rd line:	HW = Hardware version of the device
	SW = Software version of the device
⇦ or ● ↓	To query the serial number
● ↻ or ● ↺	To another item in the main menu
Esc or M	Back to driving mode

HandControl V2
Ser.-Nr.: 1191

Esc	Back to the main menu
M	Back to driving mode

4.7. Update

Only select this menu item if you actually want to perform an update. Once the update has started, the current software version will be deleted. In this case, a valid software version must be reinstalled.

Performing an update → Section 6. Update

tams elektronik

tams elektronik

5. Driving mode

5.1. Basic settings

When you leave one of the function areas [▮▮] [F] [γ Γ] of [M], you return to the basic settings for driving mode.

The display shows the last decoder address called up, the assigned data format, the speed level set, the direction of travel, the locomotive name (if assigned) and the functions that are activated. It also shows whether a locomotive is locked against being taken over by another control unit.

Please note: In Motorola I format, no absolute direction information is sent. Therefore, no arrow for the direction of travel is displayed for decoders for the Motorola I format.

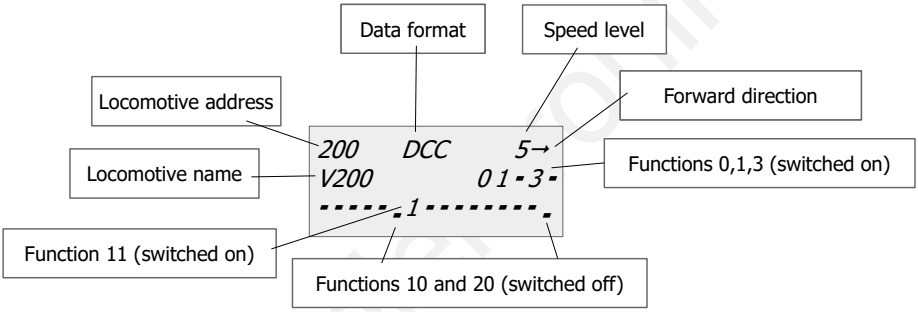

5.2. Switching the track voltage on and off

With the HandControl 2, you can switch the entire layout on and off using the [⇦] or go and [Esc] or stop buttons.

Note: It is not possible to switch the layout on and off if the corresponding function area has been called up previously with the locomotive, function, turnout or menu button.

200 DCC 5→ V200 0 1 - 3 - - - - - - - 1 - - - - - - - - -	[⇦] | go	Switch on the booster → The tracks are supplied with power.
200 **STOP** 5→ V200 0 1 - 3 - - - - - - - 1 - - - - - - - - - Note: To trigger a 'STOP', you must press and hold the button a little longer (approx. 0.5 seconds).	[Esc] | stop	Switch off the booster → Operation on the entire layout is maintained. '*STOP*' is displayed instead of the data format. The speed levels and the status of the functions are retained! As soon as you switch the boosters back on with [⇦] or go all active locomotives continue to run at the set speed level.

5.3. Controlling vehicle decoders

5.3.1. Active vehicle decoders

As soon as you call up a locomotive or function decoder, the address is stored internally as 'active'. The last locomotive address called up is shown on the display. Up to 64 active locomotives can be managed in the internal data memory. If a 65th locomotive is called up, the locomotive that has not been shown on the display for the longest time is deleted from the list of active locomotives.

As soon as you call up a locomotive address, the system automatically accesses the parameters stored in the locomotive database of the central unit. When you call up a locomotive address for the first time, the default settings are automatically assigned to it.

→ Section 4.1. Locomotive menu

5.3.2. Selecting a vehicle decoder

Entering the address using the numeric keypad

First press the locomotive button and enter the address using the numeric keypad. You must confirm the address entry with [⇦] or ● ↓. The address can be 1 to 5 digits long. Leading zeros (address 09) are not necessary and will be ignored.

If you enter a decoder address that is not yet stored in the locomotive database, the default settings (→ Section 4.4.6) are automatically assigned to the address. You can then edit the data in the locomotive database via the menu (→ sections 4.1.2., 4.1.3. and 4.1.6.).

Quick selection button

You can assign the speed dial keys [1] to [9] to up to 9 different vehicle decoders (→ section 4.1.4.). You can also assign several speed dial keys to a vehicle. The speed dial keys are only valid for the HandControl 2 with which they were assigned.

To call up a decoder using the quick selection button, press the [M] button and then the assigned quick selection button [1] to [9] .

Controlling two vehicles alternately

Use the quick selection button [0] to switch between the last two active locomotives. Press the [M] button and then the assigned quick selection button [0].

Selecting a decoder from the locomotive database

Press the [M] button and select the menu item 'Locomotive menu / Select' (→ section 4.1.1.). Search for the vehicle decoder by turning the speed control (● ↻ or ● ↺) and confirm your selection with [⇦] or ● ↓.

Please note that the decoders in the locomotive database are sorted according to the assigned locomotive names.

tams elektronik

5.3.3. Setting the speed

Set the speed for the locomotive shown on the display by turning the speed control. The set value is shown on the display. The highest possible speed level depends on the data format and the number of speed levels assigned to the locomotive decoder.

Note: For vehicle decoders with 128 speed levels, you can choose between different modes for implementing speed level changes. (→ Section 4.4.1.).

Entering the speed level via the keypad

As an alternative to setting the speed level by turning the speed control, you can also enter the desired speed level using the number keys. To do this, press the keys [⏮], number keys [1] to [9] and then again [⏮]

5.3.4. Setting the direction of travel

The set direction of travel is shown on the display (except for decoders for the Motorola I format):

→ forward

← backward

A change in the direction of travel is triggered

- in AC controller mode:
  by pressing the speed controller ● ↓ . The speed level is set to 0.
- in DC controller mode:
  by turning the speed controller to the left or right beyond speed level 0

To set the controller mode → Section 4.4.2.

5.3.5. Switching functions on and off

Functions F0 to F127

You can switch the functions up to F127 of a vehicle decoder on and off by

- pressing the [F] button
- and entering the function number using the number buttons. You can delete an incorrect entry with [Esc].
- Press the [⇦] button to confirm your entry. Note: It is not possible to confirm your entry by pressing the speed controller! This triggers a change of direction.

Quick access to functions F0 to F9

You can switch functions F0 to F9 on and off directly from the basic settings by pressing the buttons [0] to [9].

tams elektronik

Display of functions F0 to F28

The activated functions F0 to F28 are shown on the display by the corresponding digits of the assigned function icons. For functions from F10 onwards, only the ones digit is displayed. Functions F0, F10, F20 (and F30) are indicated by a subscript dot when they are deactivated.

Function icons	on	off
Light	✳	o
Shunting gear	½	|
Acceleration and brake delay	◿	⌋
Current-conducting coupling	ϟ	–
Decoupler / Telex	⊤	_
Smoke	¶	Π
Sound	🔈	K

Assignment of function icons → Section 4.1.6.

Functions from F128

The functions from F128 onwards (so-called binary states) can also be switched by

- pressing the F button
- entering the function number using the number keys
- pressing the esc button for the 'off' function or
- pressing the ⇦ button for the 'on' function

The states of the functions from F128 onwards are not shown in the display..

5.4. Controlling accessory decoders

First press the button ۲۸ and enter the address using the numeric keypad. Then switch the accessory (turnout, signal, etc.) using

- the Esc button for turnout position 'straight'
- the ⇦ button for turnout position 'diverging'

tams elektronik

5.5. Shuttle mode

With the HandControl 2, you can control shuttle service on a shuttle section for one locomotive. Please note:

- Shuttle mode must be activated with the HandControl 2.
- Shuttle mode is set for the locomotive that was last called before activation.
- You must assign the shuttle section contacts of the first s88 feedback module. Please note that shuttle service for the shuttle locomotive is also triggered if the contacts of the s88 module are not triggered by this locomotive, but e.g. by another locomotive.

5.6. Double traction

Controlling both locomotives in double traction is only possible if both decoders are assigned the same number of speed levels. Double traction with locomotive decoders with different data formats is possible, provided that both decoders have 14 speed levels or the Motorola decoder has 27 speed levels and the DCC decoder has 28 speed levels.

Forming double traction

```
200      DCC        0→
V200            01-3-
-----.---------.
```

Drive the two locomotives one behind the other and set both locomotives to the same direction of travel. Call up the address of the first (front) locomotive.

```
#-ADR:   100        0→
ESC = Abbruch
```

[Del] + [⇦]	Initiate the formation of double traction.
[1] [2] [9]	Call up the second locomotive.
[⇦] of ● ↓	Activate the double traction.

Driving with double traction

```
200   GO 100   0→
 01-3-  <  -----
 01-8-  <  -----
```

After forming the double traction, both locomotives are displayed with their active functions, the first on the left and the second on the right. To change the display order, you must call up the address of the locomotive that you want to display on the left again.

You can switch the functions F0 to F9 of both locomotives by pressing the buttons [1] to [9]. Switching additional functions is not possible with double traction.

To switch between the two locomotives, press the [F] button. The arrow indicates which of the two locomotives you can enter commands for (here locomotive 200).

Disconnecting double traction

To disconnect, call up one of the two locomotives from the double traction twice in succession.

tams elektronik

5.7. Driving with multiple control units

As soon as a HandControl 2 is connected to the EasyNet, the device is automatically registered with the central unit (RedBox, MasterControl or MasterControl 2). If a locomotive address is called up on the HandControl 2, the central unit checks whether the locomotive is locked against being taken over by another control unit. If this is not the case, the central unit assigns the locomotive and its current status (data format, speed level, direction of travel, function status, name) to the HandControl 2. The locomotive can then be controlled from the HandControl 2. The travel information is transmitted from the HandControl 2 to the central unit, which sends the data to the corresponding decoder.

Blocking a locomotive address from being taken over

Once you have entered a decoder address on a device, you can control the decoder from that device.

To prevent another device from taking over control of a decoder, repeat the address entry and confirm with ⇦ or ● ↓. The locomotive is then locked against takeover, which is indicated on the display by the lock symbol 🔒 next to the locomotive address. The lock is released by re-entering the locomotive address or entering a different locomotive address.

Special features of double traction

A double traction initially remains under the control of the device where it was formed. It cannot be taken over by another control unit. Only when a different address has been entered on the device in question is it possible to take over the double traction on another control unit.

5.8. Restarting the system (reset)

You can perform a reset by pressing the ⇦ or go and Esc or stop buttons simultaneously. Hold the buttons down until 'Reset' appears on the display. As soon as you release the buttons, the system will restart:

- All functions of the locomotive and function decoders will be switched off.
- The speed levels of all locomotives will be set to '0'.
- Double tractions are released.
- The last address called up is reset on all connected devices.
- The booster(s) (track voltage) is/are switched off.

tams elektronik

6. Update

The HandControl 2 and other EasyControl devices are mature products that reflect the current state of the art. However, new developments make it necessary to adapt the software used to control the devices. Software updates can be used to bring the devices up to the latest version.

Please note: All EasyControl devices that you use in a digital control system must have the latest software version! Otherwise, data transmission between the devices may be disrupted.

You can download the latest software (firmware) free of charge from our website (under 'Download').

6.1. Update with a MasterControl or RedBox

Required hardware and software

To perform the update with a MasterControl or RedBox, you will need

- a PC with a Linux or Windows operating system and Internet access
- a USB cable (or a serial cable if you are using version 'V24' of the RedBox)
- the 'CV-Navi' software, which you can download free of charge from our website

Update with the 'CV-Navi' software

Connect your MasterControl or RedBox to your PC. Start the 'CV-Navi' software that you previously downloaded from our homepage to your PC.

Please note: Always establish the connection between your MasterControl or RedBox and the PC before starting the 'CV-Navi' program. Otherwise, the software may not correctly recognise the interface through which you have connected your PC to the central unit.

Download the firmware for the HandControl 2 (i.e. the software that controls the HandControl 2) from the homepage to your PC. You will find the firmware at:

www.tams-online.de/download/firmware

Follow the instructions in the 'CV-Navi' software.

6.2. Update with a MasterControl 2 (mc²)

To perform the update with a MasterControl 2, you must connect the central unit to the Internet. Then start the 'Update' menu item in the mc² toolbox. Follow the instructions.

tams elektronik

6.3. Starting the update mode of the HandControl 2

Via the 'Update' menu item

After pressing the [M] button, you can select the 'Update' menu item. Only select this menu item if you actually want to perform an update.

Please note: Once the update has started, the current software version will be deleted. In this case, a valid software version must be reinstalled.

↕ Update

[⇦] or ● ↓	To update
● ↻ or ● ↺	To another item in the main menu
[Esc] or [M]	Back to driving mode

↵ Update
⇦ = Update
Esc = cancel

[⇦] or ● ↓	Perform update
[Esc]	Cancel update and back to the main menu
[M]	Back to driving mode

Alternative way to switch to update mode

If you cannot start the 'Update' menu item on your HandControl, proceed as follows:

- Pull the cable out of the RJ 12 socket on the HandControl 2.
- Press and hold the [Esc] or stop and [⇦] or go buttons simultaneously and plug the cable back into the socket. The bootloader message appears on the display.

6.4. Update service

If you do not want to or cannot carry out the update yourself, you can send us the HandControl 2 and the central unit. If you have other EasyControl devices in use, you must also send these in for the update. The update is free of charge; we only charge the shipping costs for the return shipment in accordance with our current price list.

tamselektronik

7. Checklist for troubleshooting

Error when switching on

After switching on, the display 'freezes' and does not change to the default setting.

Possible cause: The contacts of the EasyNet connection on the central unit are bent (e.g. because a smaller plug has been inserted into the EasyNet socket on the central unit). → Send the central unit in for repair.

Malfunctions during operation

Possible cause: The digital central unit (MasterControl, MasterControl 2 or RedBox) and/or external EasyControl control units do not have the latest software version. → Check whether all devices have the latest software version and perform a software update if necessary.

Error during software update

After the update, HandControl 2 cannot be started.

Possible cause: Incorrect software was installed during the update (e.g. from LokControl). → Repeat the update.

During the update, the progress bar jumps (several times) back to the beginning.

This is not an error. The update programme continuously checks whether the data transfer is correct. If this is not the case, the programme restarts the update for security reasons.

tams elektronik

7.1. Technical hotline

If you have any questions about using the HandControl 2, please contact our technical hotline (telephone number and email address on the last page).

7.2. Repairs

You can send us a defective HandControl 2 for inspection/repair (address on the last page). Please do not send us your shipment without postage paid. In the event of a warranty or guarantee claim, we will reimburse you for the regular shipping costs.

Please enclose the following with your shipment

- proof of purchase as evidence of any warranty or guarantee claim
- a brief description of the defect
- the address to which we should return the product(s)
- your email address and/or a telephone number where we can reach you in case of queries.

Costs

The inspection of returned products is free of charge for you. In the event of a warranty or guarantee claim, the repair and return are also free of charge for you.

If there is no warranty or guarantee case, we will charge you the costs of the repair and the costs of the return. We charge a maximum of 50% of the new price for the repair according to our valid price list.

Carrying out the repair(s)

By sending in the product(s), you give us the order to inspect and repair it. We reserve the right to refuse the repair if it is technically impossible or uneconomical. In the event of a warranty or guarantee claim, you will then receive a replacement free of charge.

Cost estimates

Repairs for which we charge less than € 25.00 per item plus shipping costs will be carried out without further consultation with you. If the repair costs are higher, we will contact you and carry out the repair only after you have confirmed the repair order.

Please do not send us your return freight collect. In the event of a warranty or guarantee claim, we will reimburse you for the regular shipping costs.

tams elektronik

8. Technical data

Electrical properties

Power supply	via EasyNet
Current consumption	approx. 180 mA

Protection

Protection class	IP 20 Meaning: Protected against solid foreign bodies with a diameter ≥ 12.5 mm and access with a finger. No protection against water.

Environment

	For use in closed rooms Note: To allow unhindered air exchange and to predect the unit from overheating, a distance of at least 20 cm must be maintained between the side, top and rear surfaces and surrounding surfaces.
Ambient temperature during operation	0 ~ + 60 °C
Permissible relative humidity during operation	10 ~ 85% (non-condensing)
Ambient temperature during storage	- 10 ~ + 80 °C
Permissible relative humidity during storage	10 ~ 85% (non-condensing)

Other features

Dimensions (approx.)	62 x 144 x 21 mm
Weight (approx.)	without cable: 103 g with EasyNet connection cable: 165 g

tams elektronik

tams elektronik

9. Warranty, EC Conformity & WEEE

9.1. Warranty Statement

We voluntarily grant a 2-year warranty for this product from the date of purchase by the original customer, but for a maximum of 3 years after the end of series production of the product. The first customer is the consumer who first purchased the product from us, a dealer or another natural or legal person who resells or installs the product in the course of his or her independent professional activity. The warranty exists in addition to the statutory warranty claims to which the consumer is entitled against the seller.

The scope of the guarantee includes the free repair of defects which can be proven to be due to material processed by us which is not in perfect condition or to manufacturing defects. In the case of kits, we guarantee the completeness and perfect condition of the components, as well as a function of the components in accordance with the characteristic values in uninstalled condition. We guarantee compliance with the technical data if the kit is assembled in accordance with the instructions and the finished circuit is installed and commissioned and operated in the prescribed manner.

We reserve the right to repair, rectify, replace or refund the purchase price. Further claims are excluded. Claims for compensation for consequential damage or from product liability exist only in accordance with the statutory provisions.

A prerequisite for the effectiveness of this guarantee is compliance with the operating instructions. Furthermore, the warranty claim expires in the following cases:

- in the event of unauthorised modification of the circuit,
- in the event of attempted repairs to the finished component or finished unit,
- in the event of damage caused by the intervention of third parties,
- incorrect operation or damage due to negligent handling or misuse.

tams elektronik

9.2. EC Declaration of Conformity

This product fulfils the requirements of the following EU directives and therefore bears the CE marking.

2001/95/EU Product Safety Directive

2015/863/EU on the restriction of the use of certain hazardous substances in electrical and electronic equipment (RoHS)

2014/30/EU on electromagnetic compatibility (EMC Directive). Underlying standards:

DIN-EN 55014-1 and 55014-2: Electromagnetic compatibility - Requirements for household appliances, electric tools and similar electrical appliances. Part 1: Emitted interference, Part 2: Immunity to interference

To maintain electromagnetic compatibility during operation, observe the following measures:

Only connect the power supply unit to a professionally installed and fused socket.

Do not make any changes to the original components and follow the instructions in this manual exactly.

Only use original spare parts for repair work.

9.3. Declarations on the WEEE Directive

This product is subject to the requirements of the EU Directive 2012/19/EC on Waste Electrical and Electronic Equipment (WEEE), i.e. the manufacturer, distributor or seller of the product must contribute to the proper disposal and treatment of waste equipment in accordance with EU and national law. This obligation includes

- registration with the registering authorities ("registers") in the country where WEEE is distributed or sold
- the regular reporting of the amount of EEE sold
- the organisation or financing of collection, treatment, recycling and recovery of the products
- for distributors, the establishment of a take-back service where customers can return WEEE free of charge
- for producers, compliance with the Restriction of the Use of Certain Hazardous Substances in Electrical and Electronic Equipment (RoHS) Directive.

The "crossed-out wheeled bin" symbol means that you are legally obliged to recycle the marked equipment at the end of its life. The appliances must not be disposed of with (unsorted) household waste or packaging waste. Dispose of the appliances at special collection and return points, e.g. at recycling centres or at dealers who offer a corresponding take-back service.

tams elektronik

tams elektronik

tams elektronik

Further Information and Tips:

http://www.tams-online.de

Warranty and Service:

tams elektronik GmbH

Fuhrberger Str. 4
30625 Hannover / GERMANY

Phone: +49 (0)511 / 55 60 60
Fax: +49 (0)511 / 55 61 61
Email: support@tams-online.de