Datenblatt

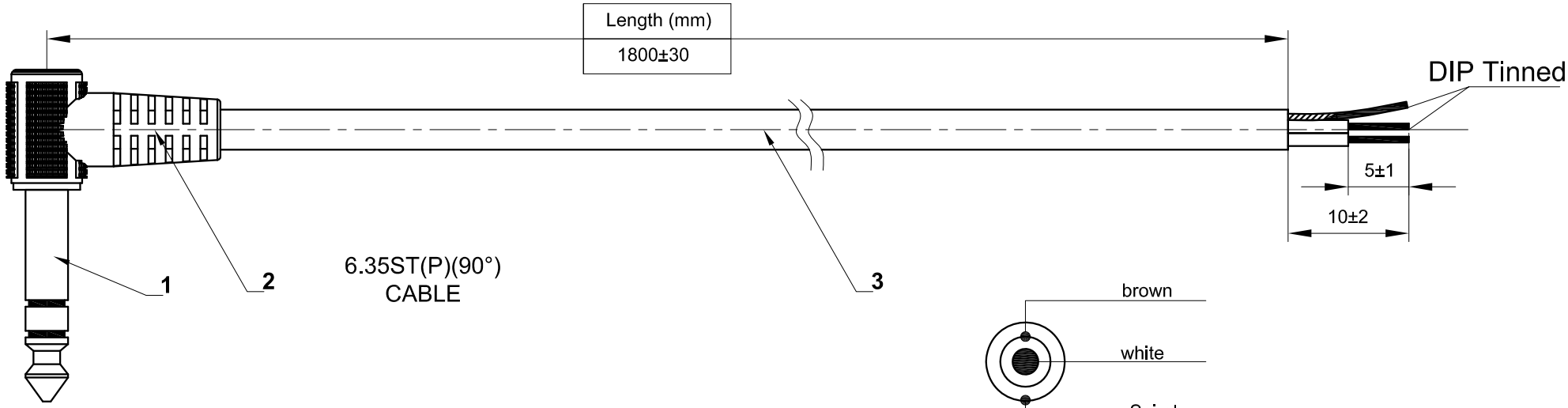

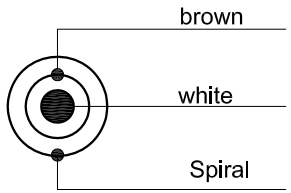

Wiring method

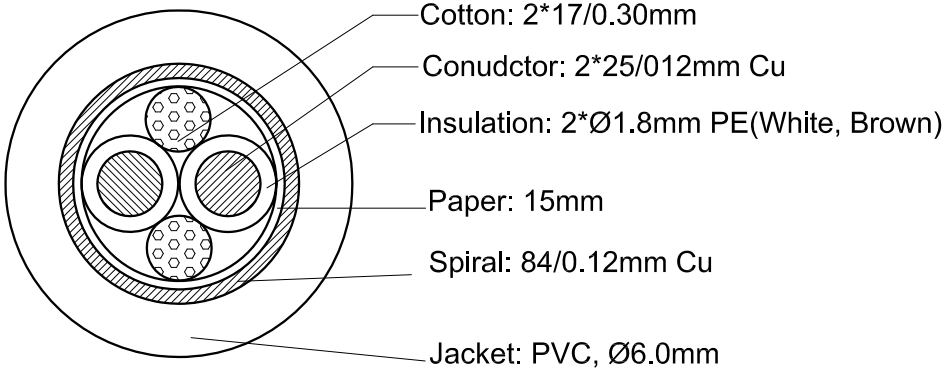

Cable Structure(A02420)

ITEM	DESCRIPTION & SPECIFICATIONS	QTY.	REMARK
3	2C round Cable	1PCS	
2	6.35ST(P)(90°) molding, PVC	1PCS	
1	6.35ST(P)(90°) plug	1PCS	Ni-plated