# OMNIMATE Signal - series BL/SL 3.50
# BL 3.50/04/180F SN OR BX

**Weidmüller Interface GmbH & Co. KG**
Klingenbergstraße 16
D-32758 Detmold
Germany
Fon: +49 5231 14-0
Fax: +49 5231 14-292083
www.weidmueller.com

## Product image



Similar to illustration

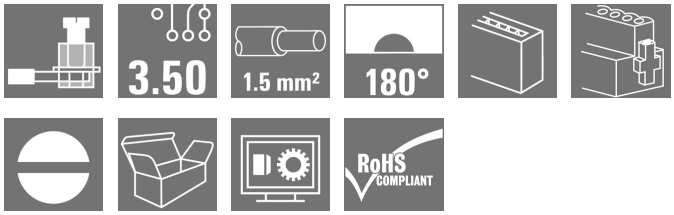


Female connectors with clamping yoke screw system for connecting conductors at 3.50 mm pitch. They provide space for labelling and can be coded.

### General ordering data

| | |
|---|---|
| Type | BL 3.50/04/180F SN OR BX |
| Order No. | 1606660000 |
| Version | PCB plug-in connector, female plug, 3.50 mm, No. of poles: 4, 180°, Clamping yoke connection, Clamping range, max. : 1.5 mm², Box |
| GTIN (EAN) | 4008190174620 |
| Qty. | 84 pc(s). |
| Product data | IEC: 320 V / 17 A / 0.2 - 1.5 mm²<br>UL: 300 V / 10 A / AWG 28 - AWG 14 |
| Packaging | Box |

# OMNIMATE Signal - series BL/SL 3.50
# BL 3.50/04/180F SN OR BX

**Weidmüller Interface GmbH & Co. KG**
Klingenbergstraße 16
D-32758 Detmold
Germany
Fon: +49 5231 14-0
Fax: +49 5231 14-292083
www.weidmueller.com

## Technical data

### Dimensions and weights

| | | | |
|---|---|---|---|
| Width | 21 mm | Width (inches) | 0.827 inch |
| Height | 13 mm | Height (inches) | 0.512 inch |
| Depth | 18.5 mm | Depth (inches) | 0.728 inch |
| Net weight | 4.03 g | | |

### system parameters

| | | | |
|---|---|---|---|
| Product family | OMNIMATE Signal - series BL/SL 3.50 | Type of connection | Field connection |
| Wire connection method | Clamping yoke connection | Pitch in mm (P) | 3.5 mm |
| Pitch in inches (P) | 0.138 inch | Conductor outlet direction | 180° |
| No. of poles | 4 | L1 in mm | 10.5 mm |
| L1 in inches | 0.413 inch | Number of rows | 1 |
| Pin series quantity | 1 | Rated cross-section | 1.5 mm² |
| Touch-safe protection acc. to DIN VDE 57 106 | Safe from finger touch | Touch-safe protection acc. to DIN VDE 0470 | IP 20 |
| Can be coded | Yes | Stripping length | 6 mm |
| Tightening torque for screw flange, min. | 0.15 Nm | Tightening torque for screw flange, max. | 0.2 Nm |
| Tightening torque, min. | 0.2 Nm | Tightening torque, max. | 0.25 Nm |
| Clamping screw | M 2 | Screwdriver blade | 0.4 x 2.5 |
| Screwdriver blade standard | DIN 5264 | Plugging cycles | 25 |
| Plugging force/pole, max. | 7 N | Pulling force/pole, max. | 5 N |

### Material data

| | | | |
|---|---|---|---|
| Insulating material | PBT | Colour | orange |
| Colour chart (similar) | RAL 2000 | Insulating material group | IIIa |
| CTI | ≥ 200 | Insulation strength | ≥ $10^8$ Ω |
| UL 94 flammability rating | V-0 | GWFI | 960 °C |
| Contact material | Copper alloy | Contact surface | tinned |
| Layer structure of plug contact | 4-8 µm Sn hot-dip tinned | Storage temperature, min. | -25 °C |
| Storage temperature, max. | 55 °C | Max. relative humidity during storage | 80 % |
| Operating temperature, min. | -50 °C | Operating temperature, max. | 100 °C |
| Temperature range, installation, min. | -30 °C | Temperature range, installation, max. | 100 °C |

### Conductors suitable for connection

| | |
|---|---|
| Clamping range, min. | 0.08 mm² |
| Clamping range, max. | 1.5 mm² |
| Wire connection cross section AWG, min. | AWG 28 |
| Wire connection cross section AWG, max. | AWG 14 |
| Solid, min. H05(07) V-U | 0.2 mm² |
| Solid, max. H05(07) V-U | 1.5 mm² |
| Flexible, min. H05(07) V-K | 0.2 mm² |
| Flexible, max. H05(07) V-K | 1.5 mm² |
| w. plastic collar ferrule, DIN 46228 pt 4, min. | 0.2 mm² |
| w. plastic collar ferrule, DIN 46228 pt 4, max. | 1.5 mm² |
| w. wire end ferrule, DIN 46228 pt 1, min | 0.2 mm² |
| w. wire end ferrule, DIN 46228 pt 1, max. | 1.5 mm² |
| Plug gauge in accordance with EN 60999 a x b; ø | 2.4 mm x 1.5 mm |

# OMNIMATE Signal - series BL/SL 3.50
# BL 3.50/04/180F SN OR BX

**Weidmüller Interface GmbH & Co. KG**
Klingenbergstraße 16
D-32758 Detmold
Germany
Fon: +49 5231 14-0
Fax: +49 5231 14-292083
www.weidmueller.com

## Technical data

| | | | | |
|---|---|---|---|---|
| Clampable conductor | Cross-section for conductor connection | Type | | fine-wired |
| | | nominal | | 0.5 mm² |
| | AEH | Stripping length | nominal | 8 mm |
| | | Stripping length | nominal | 6 mm |
| | Cross-section for conductor connection | Type | | fine-wired |
| | | nominal | | 0.75 mm² |
| | AEH | Stripping length | nominal | 8 mm |
| | | Stripping length | nominal | 6 mm |
| | Cross-section for conductor connection | Type | | fine-wired |
| | | nominal | | 1 mm² |
| | AEH | Stripping length | nominal | 8 mm |
| | | Stripping length | nominal | 6 mm |
| | Cross-section for conductor connection | Type | | fine-wired |
| | | nominal | | 0.25 mm² |
| | AEH | Stripping length | nominal | 8 mm |
| | | Stripping length | nominal | 5 mm |
| | Cross-section for conductor connection | Type | | fine-wired |
| | | nominal | | 0.34 mm² |
| | AEH | Stripping length | nominal | 8 mm |
| Reference text | The outside diameter of the plastic collar should not be larger than the pitch (P). | | | |
| Max. clamping range | 1.5 mm² | | | |

### Rated data acc. to IEC

| | | | |
|---|---|---|---|
| tested acc. to standard | IEC 60664-1, IEC 61984 | Rated current, min. no. of poles (Tu=20°C) | 17 A |
| Rated current, max. no. of poles (Tu=20°C) | 12 A | Rated current, min. no. of poles (Tu=40°C) | 14.5 A |
| Rated current, max. no. of poles (Tu=40°C) | 10 A | Rated voltage for surge voltage class / pollution degree II/2 | 320 V |
| Rated voltage for surge voltage class / pollution degree III/2 | 160 V | Rated voltage for surge voltage class / pollution degree III/3 | 160 V |
| Rated impulse voltage for surge voltage class/ pollution degree II/2 | 2.5 kV | Rated impulse voltage for surge voltage class/ pollution degree III/2 | 2.5 kV |
| Rated impulse voltage for surge voltage class/ contamination degree III/3 | 2.5 kV | Short-time withstand current resistance | 3 x 1s with 100 A |

### Rated data acc. to CSA

| | | | |
|---|---|---|---|
| Institute (CSA) | | Certificate No. (CSA) | 154685-1318353 |
| Rated voltage (Use group B / CSA) | 300 V | Rated voltage (Use group D / CSA) | 300 V |
| Rated current (Use group B / CSA) | 10 A | Rated current (Use group D / CSA) | 10 A |
| Wire cross-section, AWG, min. | AWG 28 | Wire cross-section, AWG, max. | AWG 14 |
| Reference to approval values | Specifications are maximum values, details - see approval certificate. | | |

# OMNIMATE Signal - series BL/SL 3.50
# BL 3.50/04/180F SN OR BX

**Weidmüller Interface GmbH & Co. KG**
Klingenbergstraße 16
D-32758 Detmold
Germany
Fon: +49 5231 14-0
Fax: +49 5231 14-292083
www.weidmueller.com

## Technical data

### Rated data acc. to UL 1059

| | | | |
|---|---|---|---|
| Institute (UR) | | Certificate No. (UR) | E60693 |
| Rated voltage (Use group B / UL 1059) | 300 V | Rated voltage (Use group D / UL 1059) | 300 V |
| Rated current (Use group B / UL 1059) | 10 A | Rated current (Use group D / UL 1059) | 10 A |
| Wire cross-section, AWG, min. | AWG 28 | Wire cross-section, AWG, max. | AWG 14 |
| Reference to approval values | Specifications are maximum values, details - see approval certificate. | | |

### Packing

| | | | |
|---|---|---|---|
| Packaging | Box | VPE length | 51 mm |
| VPE width | 77 mm | VPE height | 192 mm |

### Classifications

| | | | |
|---|---|---|---|
| ETIM 3.0 | EC001284 | ETIM 4.0 | EC002637 |
| ETIM 5.0 | EC002637 | ETIM 6.0 | EC002638 |
| UNSPSC | 30-21-18-10 | eClass 5.1 | 27-26-07-04 |
| eClass 6.2 | 27-26-07-04 | eClass 7.1 | 27-44-04-02 |
| eClass 8.1 | 27-44-04-02 | eClass 9.0 | 27-44-03-09 |
| eClass 9.1 | 27-44-03-09 | | |

### Notes

| | |
|---|---|
| Notes | • Additional colours on request<br>• Gold-plated contact surfaces on request<br>• Rated current related to rated cross-section & min. No. of poles.<br>• Max. outer diameter of the conductor: 2.9 mm<br>• Wire end ferrule without plastic collar to DIN 46228/1<br>• Wire end ferrule with plastic collar to DIN 46228/4<br>• P on drawing = pitch<br>• Rated data refer only to the component itself. Clearance and creepage distances to other components are to be designed in accordance with the relevant application standards. |
| IPC conformity | Conformity: The products are developed, manufactured and delivered according international recognized standards and norms and comply with the assured properties in the data sheet resp. fulfill decorative properties in accordance with IPC-A-610 "Class 2". Further claims on the products can be evaluated on request. |

### Approvals

| | |
|---|---|
| Approvals | |
| ROHS | Conform |

Creation date May 27, 2019 2:37:41 PM CEST

# OMNIMATE Signal - series BL/SL 3.50
# BL 3.50/04/180F SN OR BX

**Weidmüller Interface GmbH & Co. KG**
Klingenbergstraße 16
D-32758 Detmold
Germany
Fon: +49 5231 14-0
Fax: +49 5231 14-292083
www.weidmueller.com

## Technical data

### Downloads

| | |
|---|---|
| Approval/Certificate/Document of Conformity | Declaration of the Manufacturer |
| Brochure/Catalogue | FL DRIVES EN<br>MB DEVICE MANUF. EN<br>FL DRIVES DE<br>CAT 2 PORTFOLIOGUIDE EN<br>FL BUILDING SAFETY EN<br>FL APPL LED LIGHTING EN<br>FL INDUSTR.CONTROLS EN<br>FL MACHINE SAFETY EN<br>FL HEATING ELECTR EN<br>FL APPL_INVERTER EN<br>FL_BASE_STATION_EN<br>FL ELEVATOR EN<br>FL POWER SUPPLY EN<br>FL 72H SAMPLE SER EN<br>PO OMNIMATE EN |
| Engineering Data | EPLAN, WSCAD |
| Engineering Data | STEP |

# OMNIMATE Signal - series BL/SL 3.50
# BL 3.50/04/180F SN OR BX

**Weidmüller Interface GmbH & Co. KG**
Klingenbergstraße 16
D-32758 Detmold
Germany
Fon: +49 5231 14-0
Fax: +49 5231 14-292083
www.weidmueller.com

## Drawings

### Dimensional drawing

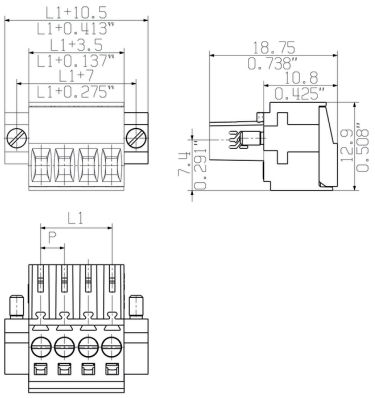


### Graph

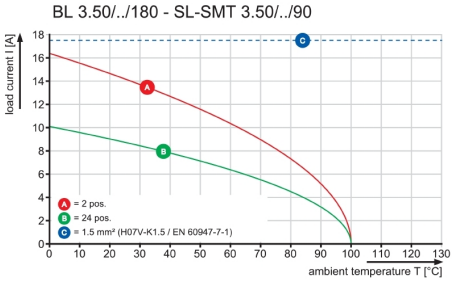


### Graph

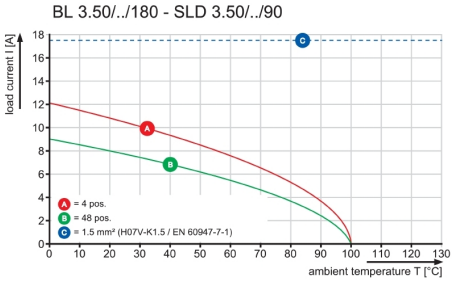


### Graph

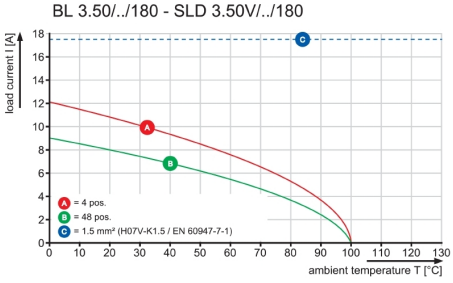


### Graph

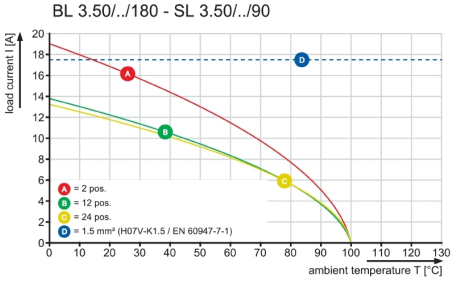

Dimensions without tolerances are no check dimensions

The English version is binding

The reproduction, distribution and utilization of this document as well as the communication of its contents to others without explicit authorization is prohibited.
Offenders will be held liable for the payment of damages. Weidmueller exclusively reserves the right to file for patents, utility models or designs.
© Weidmueller Interface GmbH & Co. KG

## BL 3.50/04/180F

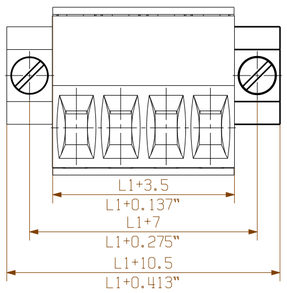


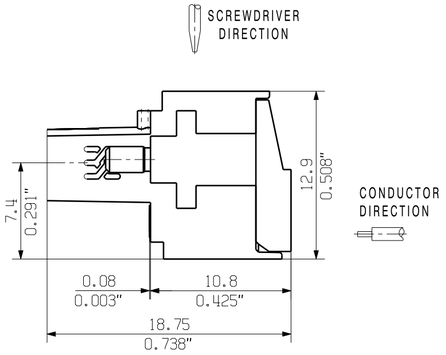


M 1/1

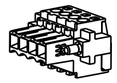

## BL 3.50/04/180LH

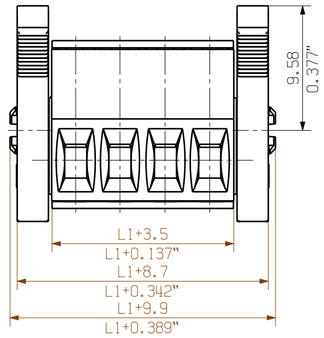


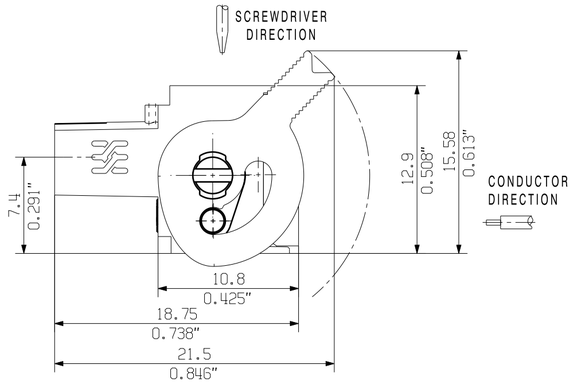


M 1/1

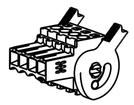

## BL 3.50/04/180LR

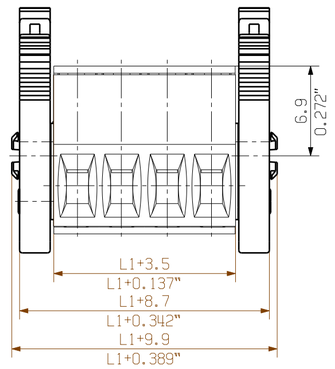


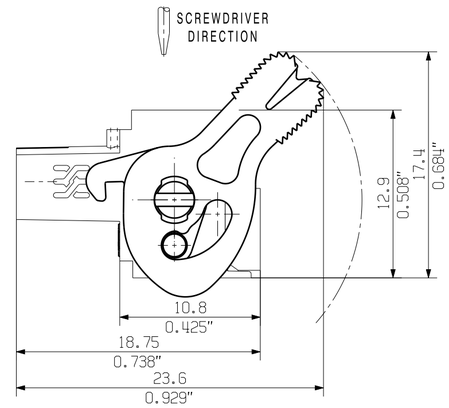


M 1/1

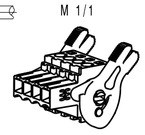

## BL 3.50/04/180LR REDESIGN

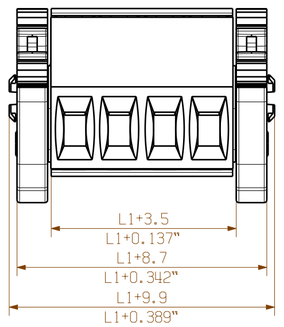


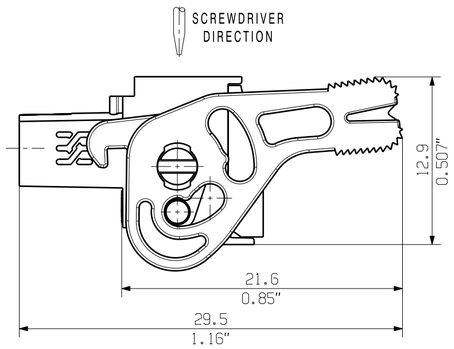


M 1/1



## BL 3.50/04/180

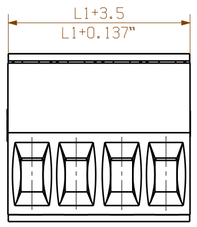


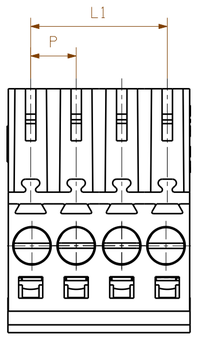


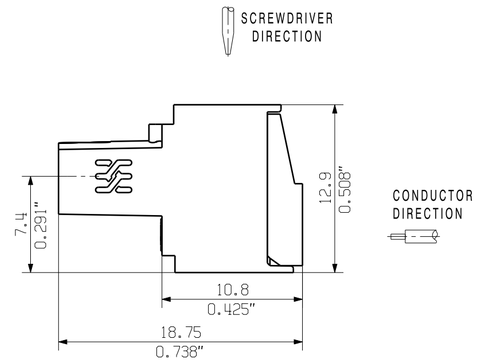


M 1/1



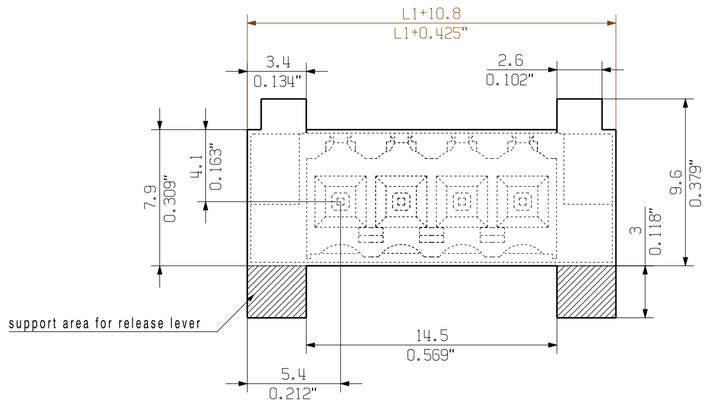


MIN. FRONT PLATE CUT-OUT

P = 3.50 RASTER PITCH

For the mounting of PCBs, it should be noted that the rated data given in the catalogue relates only to the connection elements. The neccessary creepage and clearance paths must be observed in connection with the respective applicant in accordance to VDE 0110. The current-carrying capacity and pitch tolerance is to be determined according to DIN IEC 326 part 3 very fine.

Weidmüller connectors are tested to the DIN VDE 0627 standard, and are valid for its field of application. Provided that the connectors are used to the intended purpose, all requirements with respect to the occuring of electrical, mechanical, thermic and corrosive stress will be satisfied.

| n POLZAHL POLES | L1 [mm] | L1 [inch] |
|---|---|---|
| 24 | 80.5 | 3.169 |
| 23 | 77.0 | 3.032 |
| 22 | 73.5 | 2.894 |
| 21 | 70.0 | 2.756 |
| 20 | 66.5 | 2.618 |
| 19 | 63.0 | 2.480 |
| 18 | 59.5 | 2.343 |
| 17 | 56.0 | 2.205 |
| 16 | 52.5 | 2.067 |
| 15 | 49.0 | 1.929 |
| 14 | 45.5 | 1.791 |
| 13 | 42.0 | 1.654 |
| 12 | 38.5 | 1.516 |
| 11 | 35.0 | 1.378 |
| 10 | 31.5 | 1.240 |
| 9 | 28.0 | 1.102 |
| 8 | 24.5 | 0.965 |
| 7 | 21.0 | 0.827 |
| 6 | 17.5 | 0.689 |
| 5 | 14.0 | 0.551 |
| 4 | 10.5 | 0.413 |
| 3 | 7.0 | 0.276 |
| 2 | 3.5 | 0.138 |

ALLGEMEINGUELTIGE KUNDENZEICHNUNG, AKTUELLER STAND NUR AUF ANFRAGE
GENERAL CUSTOMER DRAWING, TOPICAL VERSION ONLY IF REQUIRED

GENERAL TOLERANCE: DIN ISO 2768-m

RoHS COMPLIANT

| | | | |
|---|---|---|---|
| 103300/5 17.05.18 HELIS_MA . | 01 | Modification | |
| | | Drawn | 02.09.2008 HELIS_MA |
| | | Responsible | AMANN_A |
| Scale: 5/1 | | Checked | |
| Supersedes: . | | Approved | LANG_T |

. .

Cat.no.: .

Weidmüller

3 19675 36

Drawing no. Issue no.

Sheet 00 of 00 sheets

BL 3.50/../180

BUCHSENSTECKER
FEMALE PLUG

In Prüfung / Verification

Product file: BL 3.50 7382