OMNIMATE Signal - series BL/SL 3.50
BL 3.50/18/180 SN OR BX

Weidmüller Interface GmbH & Co. KG
Klingenbergstraße 16
D-32758 Detmold
Germany
Fon: +49 5231 14-0
Fax: +49 5231 14-292083
www.weidmueller.com

Product image



Similar to illustration

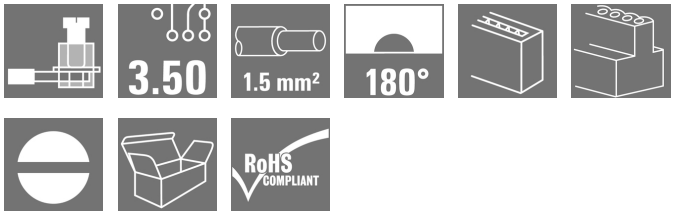

Female connectors with clamping yoke screw system for connecting conductors at 3.50 mm pitch. They provide space for labelling and can be coded.

General ordering data

Type	BL 3.50/18/180 SN OR BX
Order No.	1620300000
Version	PCB plug-in connector, female plug, 3.50 mm, No. of poles: 18, 180°, Clamping yoke connection, Clamping range, max. : 1.5 mm², Box
GTIN (EAN)	4008190154172
Qty.	24 pc(s).
Product data	IEC: 320 V / 17 A / 0.2 - 1.5 mm² UL: 300 V / 10 A / AWG 28 - AWG 14
Packaging	Box

OMNIMATE Signal - series BL/SL 3.50
BL 3.50/18/180 SN OR BX

Weidmüller Interface GmbH & Co. KG
Klingenbergstraße 16
D-32758 Detmold
Germany
Fon: +49 5231 14-0
Fax: +49 5231 14-292083
www.weidmueller.com

Technical data

Dimensions and weights

Width	63 mm	Width (inches)	2.48 inch
Height	13 mm	Height (inches)	0.512 inch
Depth	18.5 mm	Depth (inches)	0.728 inch
Net weight	15.917 g		

system parameters

Product family	OMNIMATE Signal - series BL/SL 3.50	Type of connection	Field connection
Wire connection method	Clamping yoke connection	Pitch in mm (P)	3.5 mm
Pitch in inches (P)	0.138 inch	Conductor outlet direction	180°
No. of poles	18	L1 in mm	59.5 mm
L1 in inches	2.343 inch	Number of rows	1
Pin series quantity	1	Rated cross-section	1.5 mm²
Touch-safe protection acc. to DIN VDE 57 106	Safe from finger touch	Touch-safe protection acc. to DIN VDE 0470	IP 20
Can be coded	Yes	Stripping length	6 mm
Tightening torque, min.	0.2 Nm	Tightening torque, max.	0.25 Nm
Clamping screw	M 2	Screwdriver blade	0.4 x 2.5
Screwdriver blade standard	DIN 5264	Plugging cycles	25
Plugging force/pole, max.	7 N	Pulling force/pole, max.	5 N

Material data

Insulating material	PBT	Colour	orange
Colour chart (similar)	RAL 2000	Insulating material group	IIIa
CTI	≥ 200	Insulation strength	≥ 10^8 Ω
UL 94 flammability rating	V-0	GWFI	960 °C
Contact material	Copper alloy	Contact surface	tinned
Layer structure of plug contact	4-8 µm Sn hot-dip tinned	Storage temperature, min.	-25 °C
Storage temperature, max.	55 °C	Max. relative humidity during storage	80 %
Operating temperature, min.	-50 °C	Operating temperature, max.	100 °C
Temperature range, installation, min.	-30 °C	Temperature range, installation, max.	100 °C

Conductors suitable for connection

Clamping range, min.	0.08 mm²
Clamping range, max.	1.5 mm²
Wire connection cross section AWG, min.	AWG 28
Wire connection cross section AWG, max.	AWG 14
Solid, min. H05(07) V-U	0.2 mm²
Solid, max. H05(07) V-U	1.5 mm²
Flexible, min. H05(07) V-K	0.2 mm²
Flexible, max. H05(07) V-K	1.5 mm²
w. plastic collar ferrule, DIN 46228 pt 4, min.	0.2 mm²
w. plastic collar ferrule, DIN 46228 pt 4, max.	1.5 mm²
w. wire end ferrule, DIN 46228 pt 1, min	0.2 mm²
w. wire end ferrule, DIN 46228 pt 1, max.	1.5 mm²
Plug gauge in accordance with EN 60999 a x b; ø	2.4 mm x 1.5 mm

OMNIMATE Signal - series BL/SL 3.50
BL 3.50/18/180 SN OR BX

Weidmüller Interface GmbH & Co. KG
Klingenbergstraße 16
D-32758 Detmold
Germany
Fon: +49 5231 14-0
Fax: +49 5231 14-292083
www.weidmueller.com

Technical data

Clampable conductor	Cross-section for conductor connection	Type		fine-wired
		nominal		0.5 mm²
	AEH	Stripping length	nominal	8 mm
		Stripping length	nominal	6 mm
	Cross-section for conductor connection	Type		fine-wired
		nominal		0.75 mm²
	AEH	Stripping length	nominal	8 mm
		Stripping length	nominal	6 mm
	Cross-section for conductor connection	Type		fine-wired
		nominal		1 mm²
	AEH	Stripping length	nominal	8 mm
		Stripping length	nominal	6 mm
	Cross-section for conductor connection	Type		fine-wired
		nominal		0.25 mm²
	AEH	Stripping length	nominal	8 mm
		Stripping length	nominal	5 mm
	Cross-section for conductor connection	Type		fine-wired
		nominal		0.34 mm²
	AEH	Stripping length	nominal	8 mm
Reference text	The outside diameter of the plastic collar should not be larger than the pitch (P).			
Max. clamping range	1.5 mm²			

Rated data acc. to IEC

tested acc. to standard	IEC 60664-1, IEC 61984	Rated current, min. no. of poles (Tu=20°C)	17 A
Rated current, max. no. of poles (Tu=20°C)	12 A	Rated current, min. no. of poles (Tu=40°C)	14.5 A
Rated current, max. no. of poles (Tu=40°C)	10 A	Rated voltage for surge voltage class / pollution degree II/2	320 V
Rated voltage for surge voltage class / pollution degree III/2	160 V	Rated voltage for surge voltage class / pollution degree III/3	160 V
Rated impulse voltage for surge voltage class/ pollution degree II/2	2.5 kV	Rated impulse voltage for surge voltage class/ pollution degree III/2	2.5 kV
Rated impulse voltage for surge voltage class/ contamination degree III/3	2.5 kV	Short-time withstand current resistance	3 x 1s with 100 A

Rated data acc. to CSA

Institute (CSA)		Certificate No. (CSA)	154685-1318353
Rated voltage (Use group B / CSA)	300 V	Rated voltage (Use group D / CSA)	300 V
Rated current (Use group B / CSA)	10 A	Rated current (Use group D / CSA)	10 A
Wire cross-section, AWG, min.	AWG 28	Wire cross-section, AWG, max.	AWG 14
Reference to approval values	Specifications are maximum values, details - see approval certificate.		

OMNIMATE Signal - series BL/SL 3.50
BL 3.50/18/180 SN OR BX

Weidmüller Interface GmbH & Co. KG
Klingenbergstraße 16
D-32758 Detmold
Germany
Fon: +49 5231 14-0
Fax: +49 5231 14-292083
www.weidmueller.com

Technical data

Rated data acc. to UL 1059

Institute (UR)		Certificate No. (UR)	E60693
Rated voltage (Use group B / UL 1059)	300 V	Rated voltage (Use group D / UL 1059)	300 V
Rated current (Use group B / UL 1059)	10 A	Rated current (Use group D / UL 1059)	10 A
Wire cross-section, AWG, min.	AWG 28	Wire cross-section, AWG, max.	AWG 14
Reference to approval values	Specifications are maximum values, details - see approval certificate.		

Packing

Packaging	Box	VPE length	40 mm
VPE width	65 mm	VPE height	165 mm

Classifications

ETIM 3.0	EC001284	ETIM 4.0	EC002637
ETIM 5.0	EC002637	ETIM 6.0	EC002638
UNSPSC	30-21-18-10	eClass 5.1	27-26-07-04
eClass 6.2	27-26-07-04	eClass 7.1	27-44-04-02
eClass 8.1	27-44-04-02	eClass 9.0	27-44-03-09
eClass 9.1	27-44-03-09		

Notes

Notes

- Additional colours on request
- Gold-plated contact surfaces on request
- Rated current related to rated cross-section & min. No. of poles.
- Max. outer diameter of the conductor: 2.9 mm
- Wire end ferrule without plastic collar to DIN 46228/1
- Wire end ferrule with plastic collar to DIN 46228/4
- P on drawing = pitch
- Rated data refer only to the component itself. Clearance and creepage distances to other components are to be designed in accordance with the relevant application standards.

IPC conformity: Conformity: The products are developed, manufactured and delivered according international recognized standards and norms and comply with the assured properties in the data sheet resp. fulfill decorative properties in accordance with IPC-A-610 "Class 2". Further claims on the products can be evaluated on request.

Approvals

Approvals



ROHS: Conform

Creation date May 27, 2019 2:43:51 PM CEST

OMNIMATE Signal - series BL/SL 3.50
BL 3.50/18/180 SN OR BX

Weidmüller Interface GmbH & Co. KG
Klingenbergstraße 16
D-32758 Detmold
Germany
Fon: +49 5231 14-0
Fax: +49 5231 14-292083
www.weidmueller.com

Technical data

Downloads

Approval/Certificate/Document of Conformity	Declaration of the Manufacturer
Brochure/Catalogue	FL DRIVES EN MB DEVICE MANUF. EN FL DRIVES DE CAT 2 PORTFOLIOGUIDE EN FL BUILDING SAFETY EN FL APPL LED LIGHTING EN FL INDUSTR.CONTROLS EN FL MACHINE SAFETY EN FL HEATING ELECTR EN FL APPL_INVERTER EN FL_BASE_STATION_EN FL ELEVATOR EN FL POWER SUPPLY EN FL 72H SAMPLE SER EN PO OMNIMATE EN
Engineering Data	STEP

OMNIMATE Signal - series BL/SL 3.50
BL 3.50/18/180 SN OR BX

Weidmüller Interface GmbH & Co. KG
Klingenbergstraße 16
D-32758 Detmold
Germany
Fon: +49 5231 14-0
Fax: +49 5231 14-292083
www.weidmueller.com

Drawings

Dimensional drawing

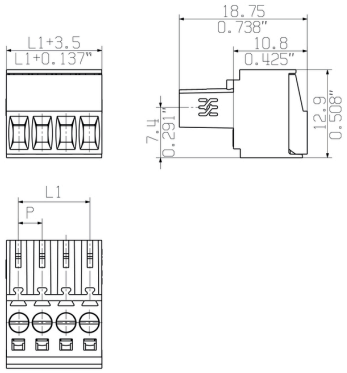

Graph

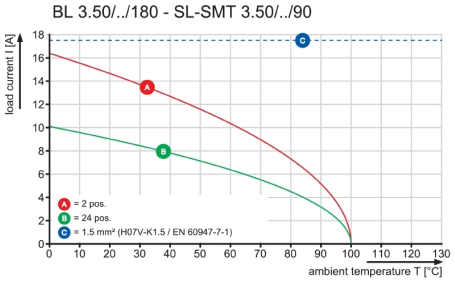

Graph

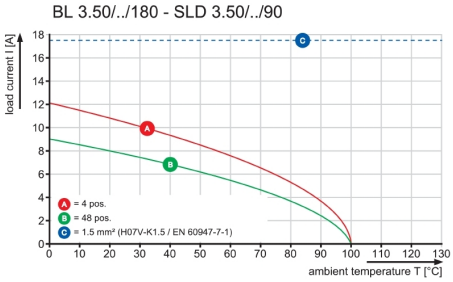

Graph

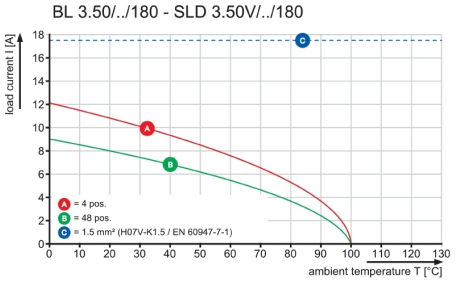

Graph

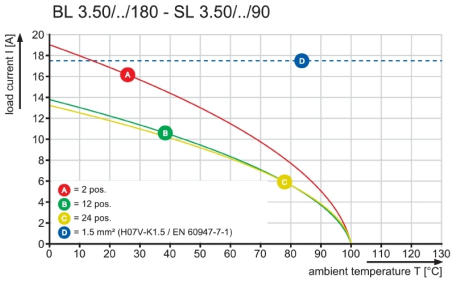

Dimensions without tolerances are no check dimensions

The English version is binding

The reproduction, distribution and utilization of this document as well as the communication of its contents to others without explicit authorization is prohibited.
Offenders will be held liable for the payment of damages. Weidmueller exclusively reserves the right to file for patents, utility models or designs.
© Weidmueller Interface GmbH & Co. KG

BL 3.50/04/180F

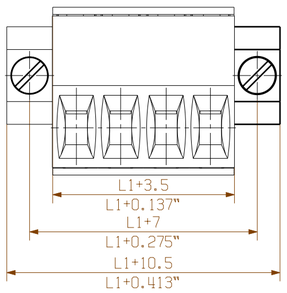

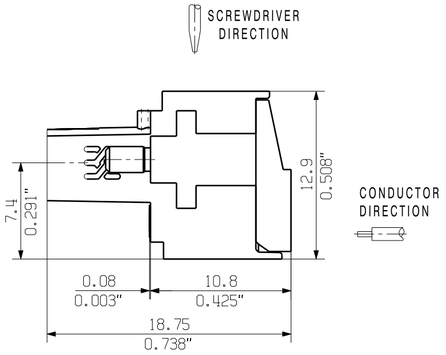

M 1/1

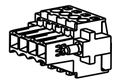

BL 3.50/04/180LH

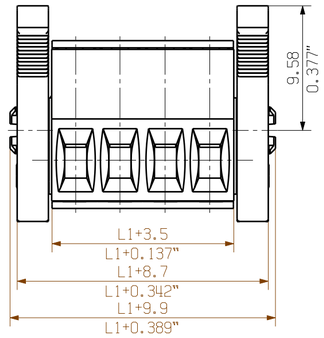

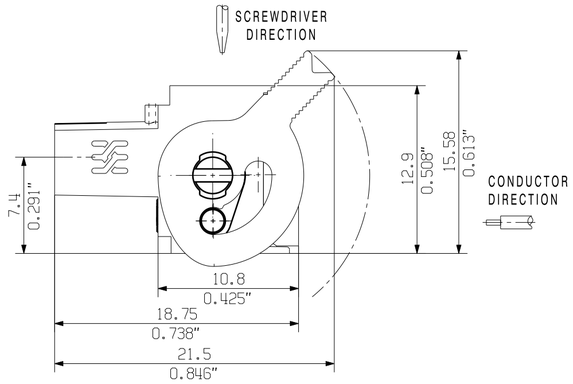

M 1/1

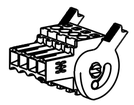

BL 3.50/04/180LR

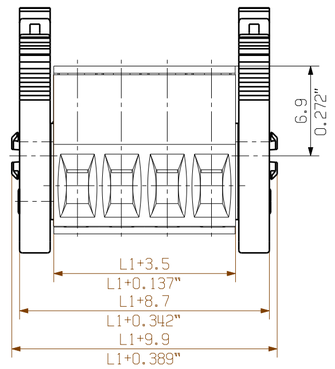

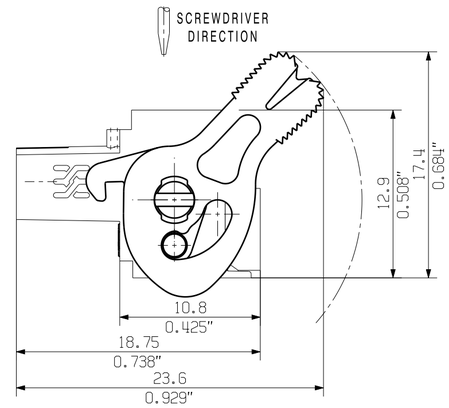

M 1/1

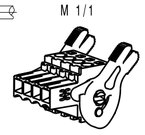

BL 3.50/04/180LR REDESIGN

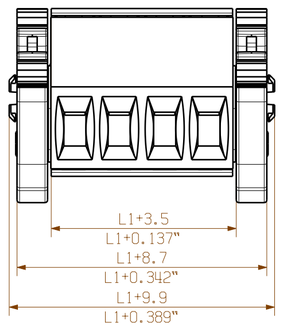

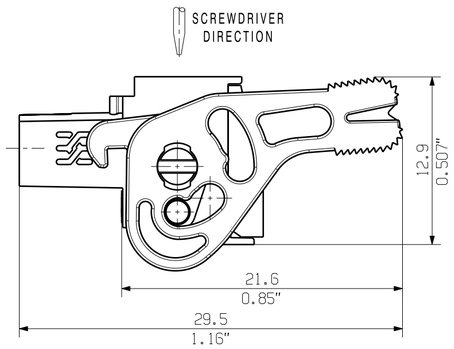

M 1/1



BL 3.50/04/180

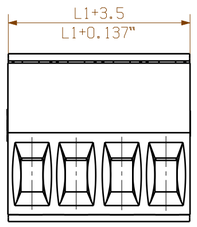

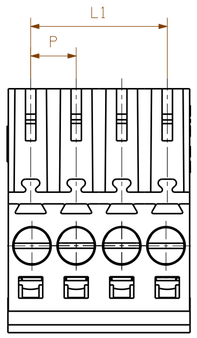

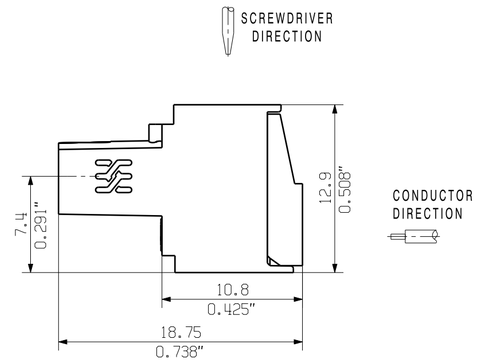

M 1/1



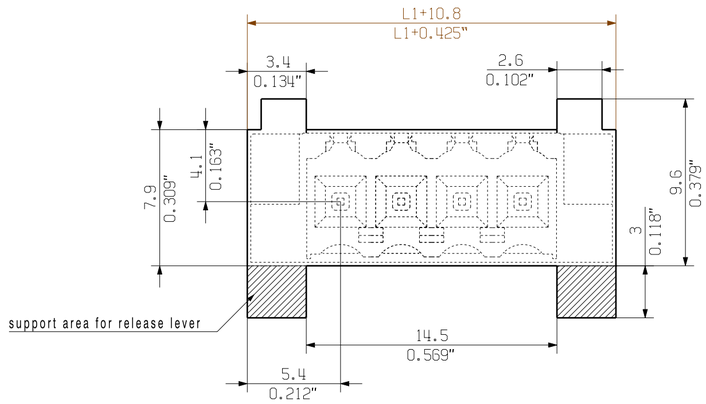

MIN. FRONT PLATE CUT-OUT

P = 3.50 RASTER PITCH

For the mounting of PCBs, it should be noted that the rated data given in the catalogue relates only to the connection elements. The neccessary creepage and clearance paths must be observed in connection with the respective applicant in accordance to VDE 0110. The current-carrying capacity and pitch tolerance is to be determined according to DIN IEC 326 part 3 very fine.

Weidmüller connectors are tested to the DIN VDE 0627 standard, and are valid for its field of application. Provided that the connectors are used to the intended purpose, all requirements with respect to the occuring of electrical, mechanical, thermic and corrosive stress will be satisfied.

n POLZAHL POLES	L1 [mm]	L1 [inch]
24	80.5	3.169
23	77.0	3.032
22	73.5	2.894
21	70.0	2.756
20	66.5	2.618
19	63.0	2.480
18	59.5	2.343
17	56.0	2.205
16	52.5	2.067
15	49.0	1.929
14	45.5	1.791
13	42.0	1.654
12	38.5	1.516
11	35.0	1.378
10	31.5	1.240
9	28.0	1.102
8	24.5	0.965
7	21.0	0.827
6	17.5	0.689
5	14.0	0.551
4	10.5	0.413
3	7.0	0.276
2	3.5	0.138

ALLGEMEINGUELTIGE KUNDENZEICHNUNG, AKTUELLER STAND NUR AUF ANFRAGE
GENERAL CUSTOMER DRAWING, TOPICAL VERSION ONLY IF REQUIRED

GENERAL TOLERANCE: DIN ISO 2768-m

RoHS COMPLIANT

103300/5 17.05.18 HELIS_MA .	01	Modification	
		Drawn	02.09.2008 HELIS_MA
		Responsible	AMANN_A
Scale: 5/1		Checked	
Supersedes: .		Approved	LANG_T

. .

Cat.no.: .

Weidmüller

3 19675 36

Drawing no. Issue no.

Sheet 00 of 00 sheets

BL 3.50/../180

BUCHSENSTECKER
FEMALE PLUG

In Prüfung / Verification

Product file: BL 3.50 7382