SAIE-M12BD-4-H10TL

Weidmüller Interface GmbH & Co. KG
Klingenbergstraße 16
D-32758 Detmold
Germany
Fon: +49 5231 14-0
Fax: +49 5231 14-292083
www.weidmueller.com

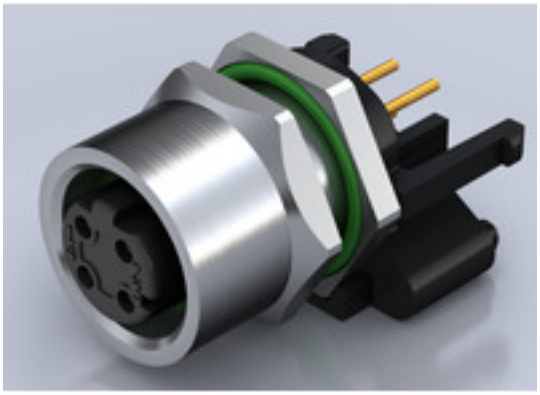

Weidmüller is now one of the industry's leading international providers of connectors. An important mainstay in this product family are the circular connectors, which Weidmüller groups under the product name SAI. In the development of SAI products, Weidmüller engineers have always concentrated on achieving rational, cost-effective installation concepts, and – in cooperation with major users – have supplied the markets with well-conceived products which set standards in terms of functionality and quality across the globe. The best examples are the new power distributors with S and T coded M12. These modules are characterised by particularly high currents and voltages. This enables them to also be used, for example, with three-phase motors.

General ordering data

Type	SAIE-M12BD-4-H10TL
Order No.	2424170000
Version	Built-in plugs, M12, No. of poles: 4
GTIN (EAN)	4050118432077
Qty.	10 pc(s).

SAIE-M12BD-4-H10TL

Weidmüller Interface GmbH & Co. KG
Klingenbergstraße 16
D-32758 Detmold
Germany
Fon: +49 5231 14-0
Fax: +49 5231 14-292083
www.weidmueller.com

Technical data

Dimensions and weights

Net weight	20 g

Environmental Product Compliance

REACH SVHC	Lead 7439-92-1

Technical data of PCB plug-in connector

Coding	D	Housing surface	nickel-plated
Housings	M12 socket	Mounting height	10 mm
Mounting thread	M12	No. of poles	4
Shield connection	Yes	Type of mounting	Rear panel mounting
Rated voltage	250 V	Rated voltage (text)	250 V
Rated current	4 A	Rated current	4 A
Temperature range	-30...80 °C	Protection degree	IP67
Contact surface	Au (Gold)	Housing main material	CuZn, nickel-plated
Connection thread	M12	Tightening torque	M12: 0.8 Nm
Mounting thread	M 12	Mounting torque range	1.2 Nm
Mounting onto the PCB	Dip solder	Insulation strength	100 MΩ
Pollution severity	3 (2 within the sealed area)	Plugging cycles	≥ 100
Contact material	CuZn	Lock nut material	Nickel-plated CuZn
Material of the flange-mounted housing	Nickel-plated CuZn		

Material data

Contact material	CuZn	Contact surface	Au (Gold)

System parameters

Mounting onto the PCB	Dip solder	Insulation strength	100 MΩ
No. of poles	4	Pin series quantity	1
Plugging cycles	≥ 100	Protection degree	IP67

Classifications

ETIM 6.0	EC002638	eClass 6.2	27-26-07-02
eClass 9.0	27-44-03-09	eClass 9.1	27-44-03-09

Approvals

ROHS	Conform

Downloads

Brochure/Catalogue	FL FIELDWIRING EN
Engineering Data	STEP

SAIE-M12BD-4-H10TL

Weidmüller Interface GmbH & Co. KG
Klingenbergstraße 16
D-32758 Detmold
Germany
Fon: +49 5231 14-0
Fax: +49 5231 14-292083
www.weidmueller.com

Drawings

Dimensioned drawing

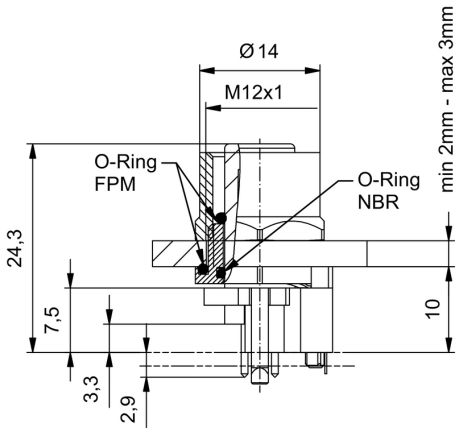

PCB design

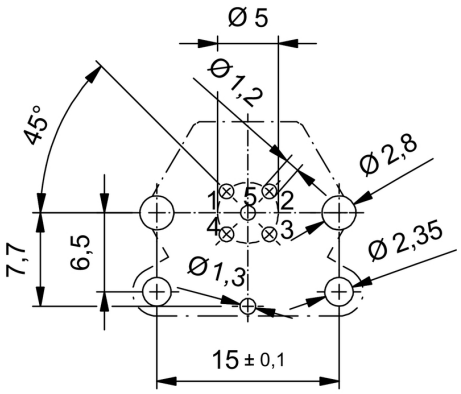

Front panel section

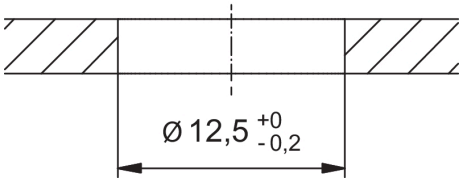

Pole scheme

