8-channel analog output; 0 … 10 V/±10 VDC

www.wago.com/750-597

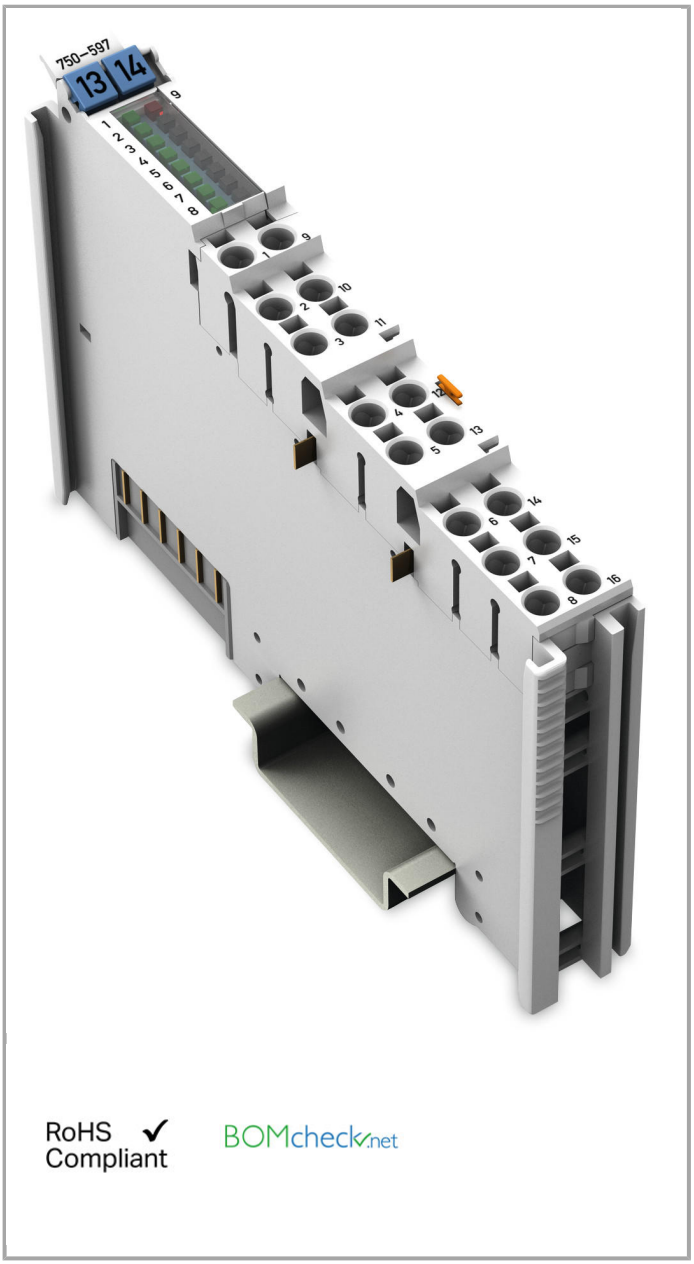

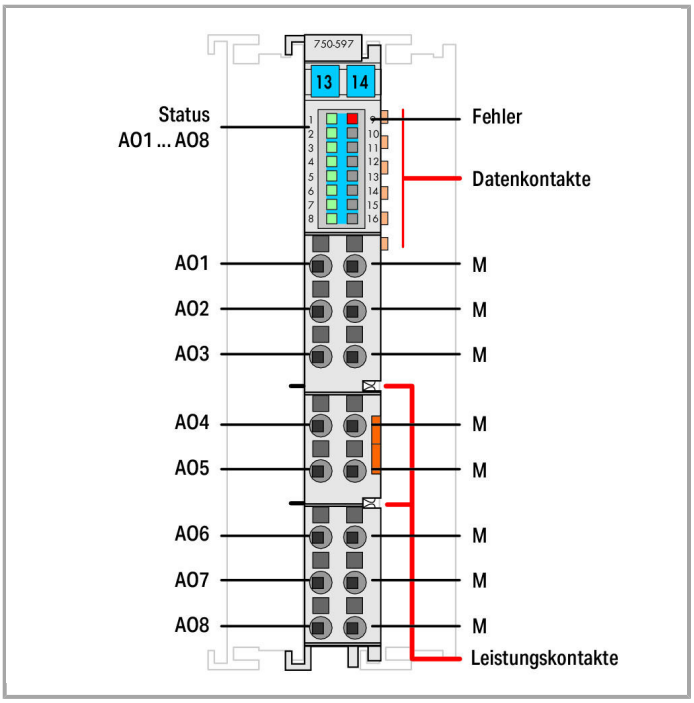

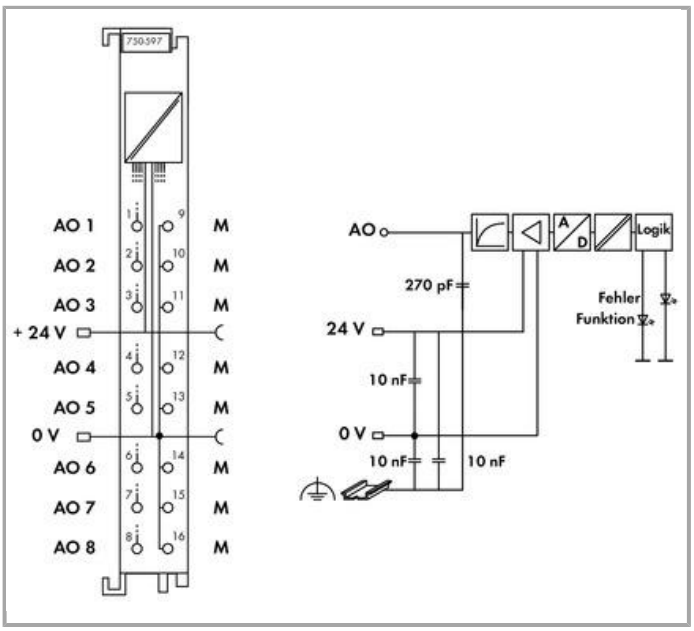

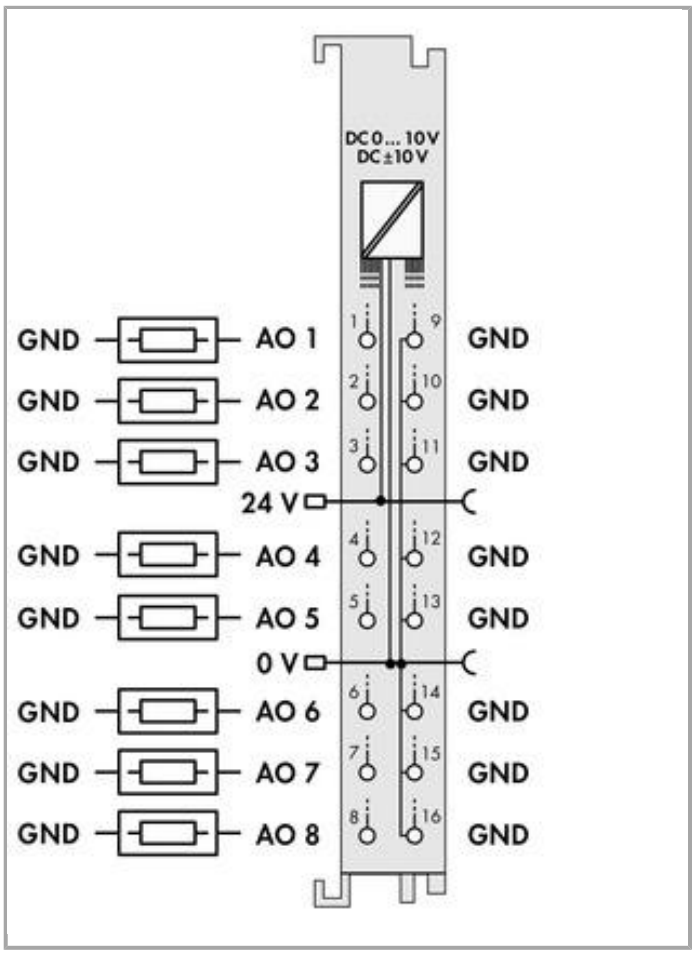

Item description

The analog output module generates signals of a standard magnitude 0–10 V and ±10V.

The output signal is electrically isolated and transmitted with a resolution of 12 bits.

Both the internal system and 24V field side supply power the module.

The output channels of the module have a common ground potential.

The bus module detects a 24 V field supply failure. The status is transmitted to the fieldbus coupler and indicated by an LED.

The module can be configured via WAGO-I/O-CHECK or GSD files.

Data

Technical Data

Number of analog outputs	8
Total number of channels (module)	8
Type of signal	Voltage
Type of signal voltage	DC 0 … 10 V
Actuator connection	8 x (2-conductor)

Resolution [bit]	12 Bit
Bit width	8 x 16-bit data; 8 x 8-bit control/status (optional)
Load impedance (output/voltage)	≥ 2kΩ
Conversion time (typ. ≤)	13 ms
Messfehler, Bezugstemperatur	25 °C
Messfehler, Abweichung max. vom Messbereichsendwert	0.1 %
Temperature coefficient	≤ ± 10 ppm/K of the largest output area
System supply voltage	DC 5 V; via data contacts
Current consumption, system supply (5 V)	61 mA
Field supply voltage	DC 24 V (-15 … 30 %); über Leistungskontakte (Einspeisung über Messerkontakt; Weiterleitung über Federkontakt)
Isolation	500 V system/field
Number of incoming power jumper contacts	2
Number of outgoing power jumper contacts	2

Connection data

Connection technology: In-/Outputs	16 x Push-in CAGE CLAMP®
Connection type (1)	Inputs/Outputs
Solid conductor	0.08 … 1.5 mm² / 28 … 16 AWG
Fine-stranded conductor	0.25 … 1.5 mm² / 22 … 16 AWG
Strip length	8 … 9 mm / 0.31 … 0.35 Inch

Geometrical Data

Width	12 mm / 0.472 inch
Height	69 mm / 2.717 inch
Height from upper-edge of DIN-35 rail	61.8 mm / 2.433 inch
Depth	100 mm / 3.937 inch

Mechanical data

Type of mounting	DIN-35 rail

Material Data

Housing material	Polycarbonate, polyamide 6.6
Weight	48 g
Conformity marking	CE

Environmental Requirements

Surrounding air (operating) temperature	0 … 55 °C
Surrounding air (storage) temperature	-40 … 85 °C
Degree of protection	IP20

Degree of pollution (5)	2 per IEC 61131-2
Operating altitude	0 … 2000 m
Mounting position	horizontal (standing/lying) or vertical
Relative air humidity (no condensation)	95 %
Vibration resistance	acc. to IEC 60068-2-6
Shock resistance	15g per IEC 60068-2-27
EMC immunity to interference	acc. to EN 61000-6-2
EMC emission of interference	acc. to EN 61000-6-3
Exposure to pollutants	Per IEC 60068-2-42 and IEC 60068-2-43
Permissible H_2S contaminant concentration at a relative humidity < 75 %	10 ppm
Permissible SO_2 contaminant concentration at a relative humidity < 75 %	25 ppm

Commercial data

Country of origin	DE
GTIN	4055143432146
Customs Tariff No.	85389099990

Approvals / Certificates

Country specific Approvals

Logo	Approval	Certificate name
	KC National Radio Research Agency	MSIP-REM-W43-AOM750

Compatible products

system box

	Item no.: 850-804 IP65 enclosure; Stainless steel; WxHxD (400x123x200 mm); 4 x M20, 16 x M16, 28 x M12 cable grip	www.wago.com/850-804
	Item no.: 850-804/000-001 IP65 enclosure; Stainless steel; WxHxD (400x123x200 mm); 2 x M20, 13 x M16, 32 x M12 cable grip	www.wago.com/850-804/000-001
	Item no.: 850-805 IP65 enclosure; Stainless steel; WxHxD (600x123x200 mm); 4 x M20, 19 x M16, 67 x M12 cable grip	www.wago.com/850-805
	Item no.: 850-814/002-000 IP65 enclosure; Sheet steel (RAL 7035); WxHxD (200x120x200 mm); without flange plate	www.wago.com/850-814/002-000

	**Item no.: 850-815/002-000** IP65 enclosure; Sheet steel (RAL 7035); WxHxD (300x120x200 mm); without flange plate	www.wago.com/850-815/002-000
	**Item no.: 850-816/002-000** IP65 enclosure; Sheet steel (RAL 7035); WxHxD (400x120x200 mm); without flange plate	www.wago.com/850-816/002-000
	**Item no.: 850-817/002-000** IP65 enclosure; Sheet steel (RAL 7035); WxHxD (600x120x200 mm); without flange plate	www.wago.com/850-817/002-000
	**Item no.: 850-825** IP65 enclosure; Aluminium (RAL 7032); WxHxD (160x100x160 mm); 9 x M12, 4 x M20	www.wago.com/850-825
	**Item no.: 850-826** IP65 enclosure; Aluminium (RAL 7032); WxHxD (240x100x160 mm); 4 x M20, 4 x M16, 14 x M12 cable grip	www.wago.com/850-826
	**Item no.: 850-826/002-000** IP65 enclosure; Aluminium (RAL 7035); WxHxD (240x100x160 mm); 4 x M20, 4 x M16, 14 x M12 cable grip	www.wago.com/850-826/002-000
	**Item no.: 850-827** IP65 enclosure; Aluminium (RAL 7032); WxHxD (320x100x160 mm); 4 x M20, 8 x M16, 17 x M12 cable grip	www.wago.com/850-827
	**Item no.: 850-827/002-000** IP65 enclosure; Aluminium (RAL 7035); WxHxD (320x100x160 mm); 4 x M20, 8 x M16, 17 x M12 cable grip	www.wago.com/850-827/002-000
	**Item no.: 850-828** IP65 enclosure; Aluminium (RAL 7032); WxHxD (480x100x160 mm); 4 x M20, 10 x M16, 35 x M12 cable grip	www.wago.com/850-828
	**Item no.: 850-828/002-000** IP65 enclosure; Aluminium (RAL 7035); WxHxD (480x100x160 mm); 4 x M20, 10 x M16, 35 x M12 cable grip	www.wago.com/850-828/002-000
	**Item no.: 850-834** IP65 enclosure; Polyester (RAL 7032); WxHxD (164x100x164 mm); 9 x M12, 4 x M20	www.wago.com/850-834
	**Item no.: 850-835** IP65 enclosure; Polyester (RAL 7032); WxHxD (244x100x164 mm); 4 x M20, 4 x M16, 14 x M12 cable grip	www.wago.com/850-835
	**Item no.: 850-836** IP65 enclosure; Polyester (RAL 7032); WxHxD (324x100x164 mm); 4 x M20, 8 x M16, 17 x M12 cable grip	www.wago.com/850-836

Supply module

	**Item no.: 750-601** Power Supply; 24 VDC	www.wago.com/750-601
	**Item no.: 750-602** Power Supply; 24 VDC	www.wago.com/750-602
	**Item no.: 750-610** Power Supply; 24 VDC; fuse holder; Diagnostics	www.wago.com/750-610
	Item no.: 750-612	

	Power Supply; 0 … 230 V AC/DC	www.wago.com/750-612

shield connection

	Item no.: 790-108 Shield clamping saddle; 11 mm wide; diameter of compatible conductor	www.wago.com/790-108
	Item no.: 790-116 Shield clamping saddle; 19 mm wide; diameter of compatible conductor; 7 … 16 mm	www.wago.com/790-116
	Item no.: 790-124 Shield clamping saddle; 27 mm wide; diameter of compatible conductor; 6 … 24 mm	www.wago.com/790-124
	Item no.: 790-140 Shield clamping saddle; diameter of compatible conductor	www.wago.com/790-140
	Item no.: 790-208 Shield clamping saddle; 12.4 mm wide; 3 … 8 mm	www.wago.com/790-208
	Item no.: 790-216 Shield clamping saddle; 21.8 mm wide; 6 … 16 mm	www.wago.com/790-216
	Item no.: 790-220 Shield clamping saddle; 30 mm wide; 6 … 20 mm	www.wago.com/790-220

Carrier rail

	Item no.: 210-112 Steel carrier rail; 35 x 7.5 mm; 1 mm thick; 2 m long; slotted; according to EN 60715; "Hole width 25 mm	www.wago.com/210-112
	Item no.: 210-113 Steel carrier rail; 35 x 7.5 mm; 1 mm thick; 2 m long; unslotted; according to EN 60715	www.wago.com/210-113
	Item no.: 210-114 Steel carrier rail; 35 x 15 mm; 1.5 mm thick; 2 m long; unslotted; similar to EN 60715	www.wago.com/210-114
	Item no.: 210-115 Steel carrier rail; 35 x 7.5 mm; 1 mm thick; 2 m long; slotted; according to EN 60715; "Hole width 18 mm	www.wago.com/210-115
	Item no.: 210-118 Steel carrier rail; 35 x 15 mm; 2.3 mm thick; 2 m long; unslotted; according to EN 60715	www.wago.com/210-118
	Item no.: 210-196 Aluminum carrier rail; 35 x 8.2 mm; 1.6 mm thick; 2 m long; unslotted; similar to EN 60715	www.wago.com/210-196
	Item no.: 210-197 Steel carrier rail; 35 x 15 mm; 1.5 mm thick; 2 m long; slotted; similar to EN 60715	www.wago.com/210-197
	Item no.: 210-198 Copper carrier rail; 35 x 15 mm; 2.3 mm thick; 2 m long; unslotted; according to EN 60715	www.wago.com/210-198
	Item no.: 210-504 Steel carrier rail; 35 x 7.5 mm; 1 mm thick; 2 m long; slotted; galvanized; according to EN 60715	www.wago.com/210-504
	Item no.: 210-505 Steel carrier rail; 35 x 7.5 mm; 1 mm thick; 2 m long; unslotted; galvanized; according to EN 60715	www.wago.com/210-505
	Item no.: 210-506	

	Steel carrier rail; 35 x 15 mm; 1.5 mm thick; 2 m long; unslotted; galvanized; similar to EN 60715	www.wago.com/210-506
	**Item no.: 210-508** Steel carrier rail; 35 x 15 mm; 1.5 mm thick; 2 m long; slotted; galvanized; similar to EN 60715	www.wago.com/210-508

Marking accessories

	**Item no.: 2009-145** Mini-WSB Inline; for smartPRINTER; on reel; stretchable 5 - 5.2 mm; plain; snap-on type	www.wago.com/2009-145
	**Item no.: 2009-145/000-002** Mini-WSB Inline; for smartPRINTER; on reel; stretchable 5 - 5.2 mm; plain; snap-on type	www.wago.com/2009-145/000-002
	**Item no.: 2009-145/000-005** Mini-WSB Inline; for smartPRINTER; on reel; stretchable 5 - 5.2 mm; plain; snap-on type	www.wago.com/2009-145/000-005
	**Item no.: 2009-145/000-006** Mini-WSB Inline; for smartPRINTER; on reel; stretchable 5 - 5.2 mm; plain; snap-on type	www.wago.com/2009-145/000-006
	**Item no.: 2009-145/000-007** Mini-WSB Inline; for smartPRINTER; on reel; stretchable 5 - 5.2 mm; plain; snap-on type	www.wago.com/2009-145/000-007
	**Item no.: 2009-145/000-012** Mini-WSB Inline; for smartPRINTER; on reel; stretchable 5 - 5.2 mm; plain; snap-on type	www.wago.com/2009-145/000-012
	**Item no.: 2009-145/000-023** Mini-WSB Inline; for smartPRINTER; on reel; stretchable 5 - 5.2 mm; plain; snap-on type	www.wago.com/2009-145/000-023
	**Item no.: 2009-145/000-024** Mini-WSB Inline; for smartPRINTER; on reel; stretchable 5 - 5.2 mm; plain; snap-on type	www.wago.com/2009-145/000-024
	**Item no.: 248-501** Miniature WSB Quick marking system; plain; Marker width 5 mm; 10 strips with 10 markers per card	www.wago.com/248-501
	**Item no.: 248-501/000-002** Mini-WSB marking card; as card; not stretchable; plain; snap-on type	www.wago.com/248-501/000-002
	**Item no.: 248-501/000-005** Mini-WSB marking card; as card; plain; snap-on type	www.wago.com/248-501/000-005
	**Item no.: 248-501/000-006** Mini-WSB marking card; as card; not stretchable; plain; snap-on type	www.wago.com/248-501/000-006
	**Item no.: 248-501/000-007** Mini-WSB marking card; as card; not stretchable; plain; snap-on type	www.wago.com/248-501/000-007

	**Item no.: 248-501/000-012** Mini-WSB marking card; as card; not stretchable; plain; snap-on type	www.wago.com/248-501/000-012
	**Item no.: 248-501/000-017** Mini-WSB marking card; as card; not stretchable; plain; snap-on type	www.wago.com/248-501/000-017
	**Item no.: 248-501/000-023** Mini-WSB marking card; as card; not stretchable; plain; snap-on type	www.wago.com/248-501/000-023
	**Item no.: 248-501/000-024** Mini-WSB marking card; as card; not stretchable; plain; snap-on type	www.wago.com/248-501/000-024
	**Item no.: 750-103** Group marker carrier	www.wago.com/750-103
	**Item no.: 750-107** Group marker carrier	www.wago.com/750-107

tools

	**Item no.: 210-719** Operating tool with partially insulated shaft; Type 1, blade (2.5 x 0.4) mm	www.wago.com/210-719

Downloads

Documentation

Manual

8-channel, 0-10VDC / ±10VDC	V 1.0.0 May 4, 2016	PDF 5.4 MB	Download

Bid Text

750-597	Mar 10, 2017	DOC 29.2 kB	Download

Additional Information

Disposal; Electrical and electronic equipment, Packaging	Oct 15, 2018	265.8 kB	Download

System Description

Use in Hazardous Environments Term definition, marking and installation regulations	May 8, 2014	1.0 MB	Download
Design Notes Basic conditions and recommendations for higher operational safety	May 3, 2011	1.5 MB	Download

750/753 Series I/O-System – General Product Information

[illegible]	May 29, 2018	2.0 MB	Download
Overview on WAGO-I/O-SYSTEM 750 approvals	Jun 6, 2017	314.9 kB	Download

Application Notes

Application Note CoDeSys 2.3

Application Note Library ModuleAccess_01 These instructions describe the use of the ModuleAccess_01.lib library using 4 examples.	Jan 29, 2016	1.0 MB	Download

Libraries

Library

ModuleAccess_01.lib The ModuleAccess_01 library provides both module configuration and access to its process data within a CoDeSys project without the use of WAGO I/O Check.	Feb 16, 2018	1.5 MB	Download

smartDATA

CAD data

3D Download 750-597		URL	Download

Product family

750/753 Series I/O-System
Learn more about the product family.

Show all products from the family

WAGO Kontakttechnik GmbH & Co. KG
Hansastr. 27
32423 Minden
Phone: +49571 887-0 | Fax: +49571 887-169
Email: info.de@wago.com | Web: www.wago.com

Do you have any questions about our products?
We are always happy to take your call at +49 (571) 887-44222.