3-phase power measurement module; 480 VAC, 1 A

www.wago.com/750-494



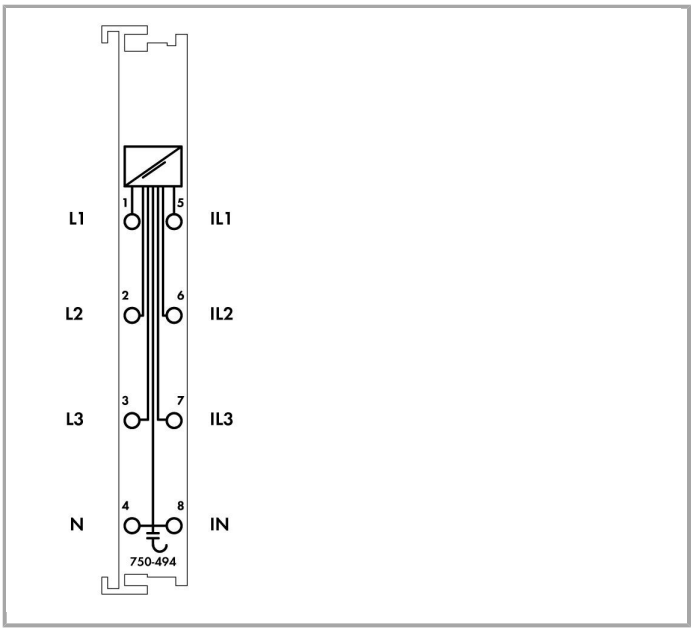

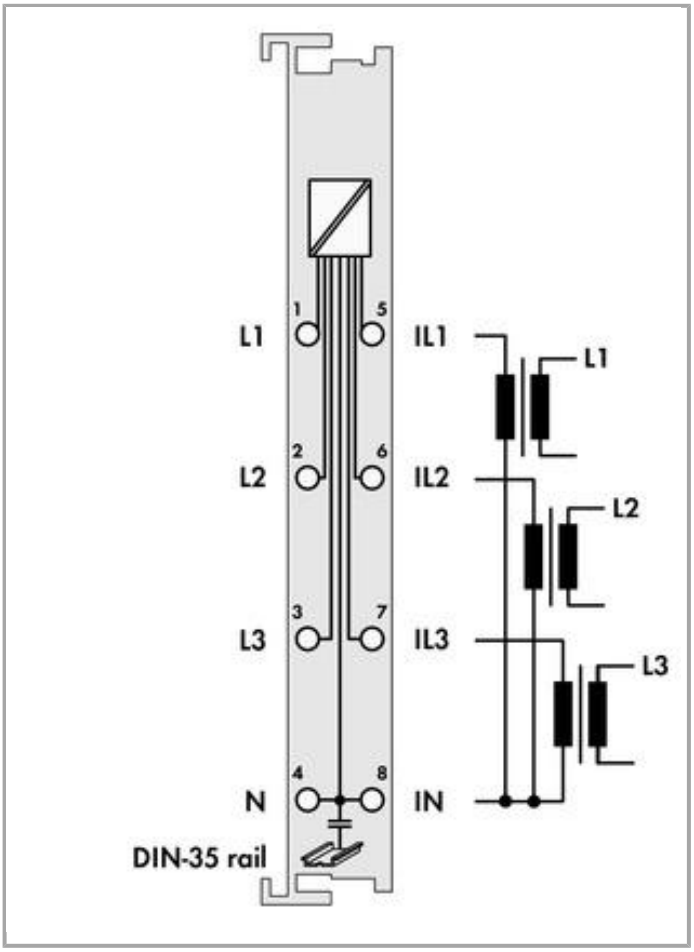

Item description

The 750-494 3-Phase Power Measurement Module measures electrical data in a three-phase supply network. The voltage is measured via network connection to L1, L2, L3 and N. The current of the three phases is fed to IL1, IL2, IL3 and IN via current transformers. The 750-494 Module transmits metrics (e.g., reactive/apparent/effective power, energy consumption, power factor, phase angle, frequency, over-/undervoltage) directly into the process image, without requiring high computing power from the controller. Both comprehensive metrics and harmonic analysis up to the 41st harmonic permit an extensive network analysis via the fieldbus.

Metrics allow the operator to optimize the supply to a drive or machine, protecting the system from damage and failure. The 4-quadrant display indicates the type of load (inductive, capacitive) and whether it is an energy consumer or producer.

Data

Technical Data

Number of measurement inputs	6 (3 voltage measurement inputs, 3 current measurement inputs)
Type of signal	Power measurement
Signal form	any periodic signals (taking the maximum frequency into account)
Resolution [bit]	24 Bit
Bit width	2 x 128-bit data; 2 x 64-bit control/status
Input resistance voltage path (typ.)	1072 kΩ
Input resistance current path typ.	22mΩ

Bezug für Messfehler	AC Strom/Spannung
Messfehler, Bezugstemperatur	25 °C
Messfehler, Abweichung max. vom Messbereichsendwert	0.5 %
Measuring current (max.)	1 A
Measuring cycle time	Adjustable for arithmetic mean value, Min_Max_Values
Frequency range, power supply frequency	45 … 65 Hz
Frequency range, harmonics analysis	0 … 3300 Hz
Operating frequency	15.9 kHz
Rated voltage	V_{LN} = 277 V AC/DC; V_{LL} = 480 V AC
Measured values	Line-to-line voltage, power output, energy, power factors, mains frequency, harmonic analysis (up to the 41st harmonic), THD
Messkomponenten	Evaluating
Measuring procedure	True RMS measurement
System supply voltage	DC 5 V; via data contacts
Current consumption, system supply (5 V)	100 mA
Isolation	4 kV System/Feld
Rated surge voltage	4 kV

Connection data

Connection technology: In-/Outputs	8 x CAGE CLAMP®
Connection type (1)	Inputs/Outputs
Solid conductor	0.08 … 2.5 mm² / 28 … 14 AWG
Fine-stranded conductor	0.08 … 2.5 mm² / 28 … 14 AWG
Strip length	8 … 9 mm / 0.31 … 0.35 Inch

Geometrical Data

Width	12 mm / 0.472 inch
Height	67.8 mm / 2.669 inch
Height from upper-edge of DIN-35 rail	60.6 mm / 2.386 inch
Depth	100 mm / 3.937 inch

Mechanical data

Type of mounting	DIN-35 rail

Material Data

Color	lichtgrau
Housing material	Polycarbonate, polyamide 6.6
Weight	49.628 g
Conformity marking	CE

Environmental Requirements

Surrounding air (operating) temperature	0 … 55 °C
Surrounding air (storage) temperature	-40 … 85 °C
Degree of protection	IP20
Degree of pollution (5)	2
Operating altitude	0 … 2000 m
Mounting position	horizontal (standing/lying) or vertical
Relative air humidity (no condensation)	95 %
Vibration resistance	4g per IEC 60068-2-6
Shock resistance	15g per IEC 60068-2-27
EMC immunity to interference	acc. to EN 61000-6-2
EMC emission of interference	acc. to EN 61000-6-3
Exposure to pollutants	Per IEC 60068-2-42 and IEC 60068-2-43
Permissible H_2S contaminant concentration at a relative humidity < 75 %	10 ppm
Permissible SO_2 contaminant concentration at a relative humidity < 75 %	25 ppm

Commercial data

Country of origin	DE
GTIN	4050821548232
Customs Tariff No.	85389099990
Product Group	15 (Remote I/O)

Approvals / Certificates

Ex-Approvals

Logo	Approval	Certificate name
	ATEX TUEV Nord Cert GmbH	TÜV 07 ATEX 554086 X en.
	TUEV Nord TUEV Nord Cert GmbH	IECEx TUN 09.0001 X
	UL Underwriters Laboratories Inc. (HAZARDOUS LOCATIONS)	E198726 Sec.1 (HAZARDOUS LOCATIONS)

Country specific Approvals

Logo	Approval	Certificate name

	KC National Radio Research Agency	MSIP-REM-W43-AIM750
	KC National Radio Research Agency	MSIP-REM-W43-AIM750

Ship Approvals

Logo	Approval	Certificate name
	PRS Polski Rejestr Statków	TE/2210/880590/18

UL-Approvals

Logo	Approval	Certificate name
	UL UL International Netherlands B.V. (ORDINARY LOCATIONS)	E175199 Sec.1 (ORDINARY LOCATIONS)

Compatible products

current transformer

	Item no.: 855-1001/2500-1001 Plug-in current transformer; Primary rated current: 2500 A; Secondary rated current: 1 A; Rated power: 10 VA; Accuracy class: 1	www.wago.com/855-1001/2500-1001
	Item no.: 855-1700/032-000 Plug-in current transformer; Primary rated current 32 A; Secondary rated current 320 mA	www.wago.com/855-1700/032-000
	Item no.: 855-2701/035-001 Plug-in current transformer; Primary rated current: 35 A; Secondary rated current: 1 A; Rated power: 0.2 VA; Accuracy class: 1	www.wago.com/855-2701/035-001
	Item no.: 855-2701/064-001 Plug-in current transformer; Primary rated current: 64 A; Secondary rated current: 1 A; Rated power: 0.2 VA; Accuracy class: 1	www.wago.com/855-2701/064-001
	Item no.: 855-3001/060-003 Split-core current transformer; Primary rated current: 60 A; Secondary rated current: 1 A; Rated power: 0.2 VA; Accuracy class: 3; Cable length: 3 m	www.wago.com/855-3001/060-003
	Item no.: 855-3001/100-003 Split-core current transformer; Primary rated current: 100 A; Secondary rated current: 1 A; Rated power: 0.2 VA; Accuracy class: 3; Cable length: 3 m	www.wago.com/855-3001/100-003

	**Item no.: 855-3001/200-001** Split-core current transformer; Primary rated current: 200 A; Secondary rated current: 1 A; Rated power: 0.2 VA; Accuracy class: 1; Cable length: 3 m	www.wago.com/855-3001/200-001
	**Item no.: 855-3001/250-001** Split-core current transformer; Primary rated current: 250 A; Secondary rated current: 1 A; Rated power: 0.2 VA; Accuracy class: 1; Cable length: 3 m	www.wago.com/855-3001/250-001
	**Item no.: 855-301/050-103** Plug-in current transformer; Primary rated current: 50 A; Secondary rated current: 1 A; Rated power: 1.25 VA; Accuracy class: 3	www.wago.com/855-301/050-103
	**Item no.: 855-301/060-101** Plug-in current transformer; Primary rated current: 60 A; Secondary rated current: 1 A; Rated power: 1.25 VA; Accuracy class: 1	www.wago.com/855-301/060-101
	**Item no.: 855-301/075-201** Plug-in current transformer; Primary rated current: 75 A; Secondary rated current: 1 A; Rated power: 2.5 VA; Accuracy class: 1	www.wago.com/855-301/075-201
	**Item no.: 855-301/100-201** Plug-in current transformer; Primary rated current: 100 A; Secondary rated current: 1 A; Rated power: 2.5 VA; Accuracy class: 1	www.wago.com/855-301/100-201
	**Item no.: 855-301/150-501** Plug-in current transformer; Primary rated current: 150 A; Secondary rated current: 1 A; Rated power: 5 VA; Accuracy class: 1	www.wago.com/855-301/150-501
	**Item no.: 855-301/200-501** Plug-in current transformer; Primary rated current: 200 A; Secondary rated current: 1 A; Rated power: 5 VA; Accuracy class: 1	www.wago.com/855-301/200-501
	**Item no.: 855-301/250-501** Plug-in current transformer; Primary rated current: 250 A; Secondary rated current: 1 A; Rated power: 5 VA; Accuracy class: 1	www.wago.com/855-301/250-501
	**Item no.: 855-301/400-1001** Plug-in current transformer; Primary rated current: 400 A; Secondary rated current: 1 A; Rated power: 10 VA; Accuracy class: 1	www.wago.com/855-301/400-1001
	**Item no.: 855-301/600-1001** Plug-in current transformer; Primary rated current: 600 A; Secondary rated current: 1 A; Rated power: 10 VA; Accuracy class: 1	www.wago.com/855-301/600-1001
	**Item no.: 855-4001/100-001** Split-core current transformer; Primary rated current: 100 A; Secondary rated current: 1 A; Rated power: 0.2 VA; Accuracy class: 1; Cable length: 3 m	www.wago.com/855-4001/100-001
	**Item no.: 855-4001/150-001** Split-core current transformer; Primary rated current: 150 A; Secondary rated current: 1 A; Rated power: 0.2 VA; Accuracy class: 1; Cable length: 3 m	www.wago.com/855-4001/150-001
	**Item no.: 855-4001/200-001** Split-core current transformer; Primary rated current: 200 A; Secondary rated current: 1 A; Rated power: 0.2 VA; Accuracy class: 1; Cable length: 3 m	www.wago.com/855-4001/200-001
	**Item no.: 855-401/250-501** Plug-in current transformer; Primary rated current: 250 A; Secondary rated current: 1 A; Rated power: 5 VA; Accuracy class: 1	www.wago.com/855-401/250-501

	**Item no.: 855-401/400-501** Plug-in current transformer; Primary rated current: 400 A; Secondary rated current: 1 A; Rated power: 5 VA; Accuracy class: 1	www.wago.com/855-401/400-501
	**Item no.: 855-401/600-501** Plug-in current transformer; Primary rated current: 600 A; Secondary rated current: 1 A; Rated power: 10 VA; Accuracy class: 1	www.wago.com/855-401/600-501
	**Item no.: 855-4101/200-001** Split-core current transformer; Primary rated current: 200 A; Secondary rated current: 1 A; Rated power: 0.2 VA; Accuracy class: 1; Cable length: 3 m	www.wago.com/855-4101/200-001
	**Item no.: 855-4101/250-001** Split-core current transformer; Primary rated current: 250 A; Secondary rated current: 1 A; Rated power: 0.2 VA; Accuracy class: 1; Cable length: 3 m	www.wago.com/855-4101/250-001
	**Item no.: 855-4101/400-001** Split-core current transformer; Primary rated current: 400 A; Secondary rated current: 1 A; Rated power: 0.2 VA; Accuracy class: 1; Cable length: 3 m	www.wago.com/855-4101/400-001
	**Item no.: 855-5001/1000-000** Split-core current transformer; Primary rated current: 1000 A; Secondary rated current: 1 A; Rated power: 0.5 VA; Accuracy class: 0.5; Cable length: 5 m	www.wago.com/855-5001/1000-000
	**Item no.: 855-5001/250-001** Split-core current transformer; Primary rated current: 250 A; Secondary rated current: 1 A; Rated power: 0.5 VA; Accuracy class: 1; Cable length: 5 m	www.wago.com/855-5001/250-001
	**Item no.: 855-5001/400-000** Split-core current transformer; Primary rated current: 400 A; Secondary rated current: 1 A; Rated power: 0.5 VA; Accuracy class: 0.5; Cable length: 5 m	www.wago.com/855-5001/400-000
	**Item no.: 855-5001/600-000** Split-core current transformer; Primary rated current: 600 A; Secondary rated current: 1 A; Rated power: 0.5 VA; Accuracy class: 0.5; Cable length: 5 m	www.wago.com/855-5001/600-000
	**Item no.: 855-501/1000-1001** Plug-in current transformer; Primary rated current: 1000 A; Secondary rated current: 1 A; Rated power: 10 VA; Accuracy class: 1	www.wago.com/855-501/1000-1001
	**Item no.: 855-501/400-1001** Plug-in current transformer; Primary rated current: 400 A; Secondary rated current: 1 A; Rated power: 10 VA; Accuracy class: 1	www.wago.com/855-501/400-1001
	**Item no.: 855-501/600-1001** Plug-in current transformer; Primary rated current: 600 A; Secondary rated current: 1 A; Rated power: 10 VA; Accuracy class: 1	www.wago.com/855-501/600-1001
	**Item no.: 855-501/800-1001** Plug-in current transformer; Primary rated current: 800 A; Secondary rated current: 1 A; Rated power: 10 VA; Accuracy class: 1	www.wago.com/855-501/800-1001
	**Item no.: 855-5101/1000-000** Split-core current transformer; Primary rated current: 1000 A; Secondary rated current: 1 A; Rated power: 0.5 VA; Accuracy class: 0.5; Cable length: 5 m	www.wago.com/855-5101/1000-000

Item no.: 855-601/1500-501

	Plug-in current transformer; Primary rated current: 1500 A; Secondary rated current: 1 A; Rated power: 5 VA; Accuracy class: 1	www.wago.com/855-601/1500-501
	**Item no.: 855-801/1000-1001** Plug-in current transformer; Primary rated current: 1000 A; Secondary rated current: 1 A; Rated power: 10 VA; Accuracy class: 1	www.wago.com/855-801/1000-1001
	**Item no.: 855-801/2000-1001** Plug-in current transformer; Primary rated current: 2000 A; Secondary rated current: 1 A; Rated power: 10 VA; Accuracy class: 1	www.wago.com/855-801/2000-1001

shield connection

	**Item no.: 790-108** Shield clamping saddle; 11 mm wide; diameter of compatible conductor	www.wago.com/790-108
	**Item no.: 790-116** Shield clamping saddle; 19 mm wide; diameter of compatible conductor; 7 … 16 mm	www.wago.com/790-116
	**Item no.: 790-124** Shield clamping saddle; 27 mm wide; diameter of compatible conductor; 6 … 24 mm	www.wago.com/790-124
	**Item no.: 790-140** Shield clamping saddle; diameter of compatible conductor	www.wago.com/790-140
	**Item no.: 790-208** Shield clamping saddle; 12.4 mm wide; 3 … 8 mm	www.wago.com/790-208
	**Item no.: 790-216** Shield clamping saddle; 21.8 mm wide; 6 … 16 mm	www.wago.com/790-216
	**Item no.: 790-220** Shield clamping saddle; 30 mm wide; 6 … 20 mm	www.wago.com/790-220

Marking accessories

	**Item no.: 2009-145** Mini-WSB Inline; for smartPRINTER; on reel; stretchable 5 - 5.2 mm; plain; snap-on type	www.wago.com/2009-145
	**Item no.: 2009-145/000-002** Mini-WSB Inline; for smartPRINTER; on reel; stretchable 5 - 5.2 mm; plain; snap-on type	www.wago.com/2009-145/000-002
	**Item no.: 2009-145/000-005** Mini-WSB Inline; for smartPRINTER; on reel; stretchable 5 - 5.2 mm; plain; snap-on type	www.wago.com/2009-145/000-005
	**Item no.: 2009-145/000-006** Mini-WSB Inline; for smartPRINTER; on reel; stretchable 5 - 5.2 mm; plain; snap-on type	www.wago.com/2009-145/000-006
	**Item no.: 2009-145/000-007** Mini-WSB Inline; for smartPRINTER; on reel; stretchable 5 - 5.2 mm; plain; snap-on type	www.wago.com/2009-145/000-007

	**Item no.: 2009-145/000-012** Mini-WSB Inline; for smartPRINTER; on reel; stretchable 5 - 5.2 mm; plain; snap-on type	www.wago.com/2009-145/000-012
	**Item no.: 2009-145/000-023** Mini-WSB Inline; for smartPRINTER; on reel; stretchable 5 - 5.2 mm; plain; snap-on type	www.wago.com/2009-145/000-023
	**Item no.: 2009-145/000-024** Mini-WSB Inline; for smartPRINTER; on reel; stretchable 5 - 5.2 mm; plain; snap-on type	www.wago.com/2009-145/000-024
	**Item no.: 248-501** Miniature WSB Quick marking system; plain; Marker width 5 mm; 10 strips with 10 markers per card	www.wago.com/248-501
	**Item no.: 248-501/000-002** Mini-WSB marking card; as card; not stretchable; plain; snap-on type	www.wago.com/248-501/000-002
	**Item no.: 248-501/000-005** Mini-WSB marking card; as card; plain; snap-on type	www.wago.com/248-501/000-005
	**Item no.: 248-501/000-006** Mini-WSB marking card; as card; not stretchable; plain; snap-on type	www.wago.com/248-501/000-006
	**Item no.: 248-501/000-007** Mini-WSB marking card; as card; not stretchable; plain; snap-on type	www.wago.com/248-501/000-007
	**Item no.: 248-501/000-012** Mini-WSB marking card; as card; not stretchable; plain; snap-on type	www.wago.com/248-501/000-012
	**Item no.: 248-501/000-017** Mini-WSB marking card; as card; not stretchable; plain; snap-on type	www.wago.com/248-501/000-017
	**Item no.: 248-501/000-023** Mini-WSB marking card; as card; not stretchable; plain; snap-on type	www.wago.com/248-501/000-023
	**Item no.: 248-501/000-024** Mini-WSB marking card; as card; not stretchable; plain; snap-on type	www.wago.com/248-501/000-024
	**Item no.: 750-103** Group marker carrier	www.wago.com/750-103
	**Item no.: 750-107** Group marker carrier	www.wago.com/750-107

system box

	**Item no.: 850-804** IP65 enclosure; Stainless steel; WxHxD (400x123x200 mm); 4 x M20, 16 x M16, 28 x M12 cable grip	www.wago.com/850-804

	**Item no.: 850-804/000-001** IP65 enclosure; Stainless steel; WxHxD (400x123x200 mm); 2 x M20, 13 x M16, 32 x M12 cable grip	www.wago.com/850-804/000-001
	**Item no.: 850-805** IP65 enclosure; Stainless steel; WxHxD (600x123x200 mm); 4 x M20, 19 x M16, 67 x M12 cable grip	www.wago.com/850-805
	**Item no.: 850-814/002-000** IP65 enclosure; Sheet steel (RAL 7035); WxHxD (200x120x200 mm); without flange plate	www.wago.com/850-814/002-000
	**Item no.: 850-815/002-000** IP65 enclosure; Sheet steel (RAL 7035); WxHxD (300x120x200 mm); without flange plate	www.wago.com/850-815/002-000
	**Item no.: 850-816/002-000** IP65 enclosure; Sheet steel (RAL 7035); WxHxD (400x120x200 mm); without flange plate	www.wago.com/850-816/002-000
	**Item no.: 850-817/002-000** IP65 enclosure; Sheet steel (RAL 7035); WxHxD (600x120x200 mm); without flange plate	www.wago.com/850-817/002-000
	**Item no.: 850-825** IP65 enclosure; Aluminium (RAL 7032); WxHxD (160x100x160 mm); 9 x M12, 4 x M20	www.wago.com/850-825
	**Item no.: 850-826** IP65 enclosure; Aluminium (RAL 7032); WxHxD (240x100x160 mm); 4 x M20, 4 x M16, 14 x M12 cable grip	www.wago.com/850-826
	**Item no.: 850-826/002-000** IP65 enclosure; Aluminium (RAL 7035); WxHxD (240x100x160 mm); 4 x M20, 4 x M16, 14 x M12 cable grip	www.wago.com/850-826/002-000
	**Item no.: 850-827** IP65 enclosure; Aluminium (RAL 7032); WxHxD (320x100x160 mm); 4 x M20, 8 x M16, 17 x M12 cable grip	www.wago.com/850-827
	**Item no.: 850-827/002-000** IP65 enclosure; Aluminium (RAL 7035); WxHxD (320x100x160 mm); 4 x M20, 8 x M16, 17 x M12 cable grip	www.wago.com/850-827/002-000
	**Item no.: 850-828** IP65 enclosure; Aluminium (RAL 7032); WxHxD (480x100x160 mm); 4 x M20, 10 x M16, 35 x M12 cable grip	www.wago.com/850-828
	**Item no.: 850-828/002-000** IP65 enclosure; Aluminium (RAL 7035); WxHxD (480x100x160 mm); 4 x M20, 10 x M16, 35 x M12 cable grip	www.wago.com/850-828/002-000
	**Item no.: 850-834** IP65 enclosure; Polyester (RAL 7032); WxHxD (164x100x164 mm); 9 x M12, 4 x M20	www.wago.com/850-834
	**Item no.: 850-835** IP65 enclosure; Polyester (RAL 7032); WxHxD (244x100x164 mm); 4 x M20, 4 x M16, 14 x M12 cable grip	www.wago.com/850-835
	**Item no.: 850-836** IP65 enclosure; Polyester (RAL 7032); WxHxD (324x100x164 mm); 4 x M20, 8 x M16, 17 x M12 cable grip	www.wago.com/850-836

General accessories

	**Item no.: 2007-8873** Compact terminal block; for current and voltage transformers	www.wago.com/2007-8873
	**Item no.: 2007-8875** Compact terminal block; for current transformer circuit	www.wago.com/2007-8875
	**Item no.: 855-8001** Power tap; with fuse; 2,5 mm² (12 AWG) - 6 mm² (10 AWG); Phase	www.wago.com/855-8001
	**Item no.: 855-8002** Power tap; without fuse; 2,5 mm² (12 AWG) - 6 mm² (10 AWG); N-conductor	www.wago.com/855-8002
	**Item no.: 855-8003** Power tap; with fuse; 10 mm² (8 AWG) - 16 mm² (6 AWG); Phase	www.wago.com/855-8003
	**Item no.: 855-8004** Power tap; without fuse; 10 mm² (8 AWG) - 16 mm² (6 AWG); N-conductor	www.wago.com/855-8004
	**Item no.: 855-951/250-000** Current and voltage tap up to 95 mm²; Primary rated current: 250 A; Secondary rated current: 1 A; Rated power: 0.2 VA; Accuracy class: 0.5; fused	www.wago.com/855-951/250-000

Carrier rail

	**Item no.: 210-112** Steel carrier rail; 35 x 7.5 mm; 1 mm thick; 2 m long; slotted; according to EN 60715; "Hole width 25 mm	www.wago.com/210-112
	**Item no.: 210-113** Steel carrier rail; 35 x 7.5 mm; 1 mm thick; 2 m long; unslotted; according to EN 60715	www.wago.com/210-113
	**Item no.: 210-114** Steel carrier rail; 35 x 15 mm; 1.5 mm thick; 2 m long; unslotted; similar to EN 60715	www.wago.com/210-114
	**Item no.: 210-115** Steel carrier rail; 35 x 7.5 mm; 1 mm thick; 2 m long; slotted; according to EN 60715; "Hole width 18 mm	www.wago.com/210-115
	**Item no.: 210-118** Steel carrier rail; 35 x 15 mm; 2.3 mm thick; 2 m long; unslotted; according to EN 60715	www.wago.com/210-118
	**Item no.: 210-196** Aluminum carrier rail; 35 x 8.2 mm; 1.6 mm thick; 2 m long; unslotted; similar to EN 60715	www.wago.com/210-196
	**Item no.: 210-197** Steel carrier rail; 35 x 15 mm; 1.5 mm thick; 2 m long; slotted; similar to EN 60715	www.wago.com/210-197
	**Item no.: 210-198** Copper carrier rail; 35 x 15 mm; 2.3 mm thick; 2 m long; unslotted; according to EN 60715	www.wago.com/210-198
	**Item no.: 210-504** Steel carrier rail; 35 x 7.5 mm; 1 mm thick; 2 m long; slotted; galvanized; according to EN 60715	www.wago.com/210-504
	**Item no.: 210-505** Steel carrier rail; 35 x 7.5 mm; 1 mm thick; 2 m long; unslotted; galvanized; according to EN 60715	www.wago.com/210-505
	**Item no.: 210-506** Steel carrier rail; 35 x 15 mm; 1.5 mm thick; 2 m long; unslotted; galvanized; similar to EN 60715	www.wago.com/210-506



Item no.: 210-508
Steel carrier rail; 35 x 15 mm; 1.5 mm thick; 2 m long; slotted; galvanized; similar to EN 60715

www.wago.com/210-508

Downloads

Documentation

Manual

3-Phase Power Measurement Module 480 V	Jun 9, 2017	4.8 MB	Download

Bid Text

750-494 IO-Klemmen	Jan 20, 2016	DOC 31.2 kB	Download

Additional Information

Disposal; Electrical and electronic equipment, Packaging	Oct 15, 2018	265.8 kB	Download

System Description

Overview on WAGO-I/O-SYSTEM 750 approvals	Jun 6, 2017	314.9 kB	Download
750/753 Series I/O-System – General Product Information	May 29, 2018	2.0 MB	Download

Application Notes

Application Note CoDeSys 2.3

Application Note for the 750-494 3-Phase Power Measurement Module The application note for the 3-Phase Power Measurement Module 750-494 shows how the measured values of the power measurement module can be read. It is also shown how the power module can be configured using the WAGO-I/O-PRO- V2.3 visualization tool.	Nov 11, 2014	1.7 MB	Download

Application note SIEMENS

WagoTIA_PowerMeasurement_494 (a500611) This application note shows how to access the Wago 3-Phase Power measurement module in TIA. The example project contains two PLC devices, one for a S7-300 and one for a S7-1500. The S7-1500 PLC supports optimized block access.			Download

Libraries

e!COCKPIT libraries

e!COCKPIT library description WagoAppPowerMeasurement	Sep 7, 2018	PDF 583.8 kB	Download

smartDATA

CAD data

3D Download 750-494	URL	Download

Product family

750/753 Series I/O-System
Learn more about the product family.

Show all products from the family

WAGO Kontakttechnik GmbH & Co. KG
Hansastr. 27
32423 Minden
Phone: +49571 887-0 | Fax: +49571 887-169
Email: info.de@wago.com | Web: www.wago.com