Conrad Electronic SE, Klaus-Conrad-Str. 1, D-92240 Hirschau

Item no.: 1927289

Data Sheet

TECHNICAL SPECIFICATIONS



D-Sub Hood:

Material:	UL 94 V-0 Plastic Material
Plating:	Nickel over Copper
Operating Temperature:	-55°C to +110°C
Cable Entry:	Side Entry
Thumbscrews:	UNC 4-40 (Standard)
Cable O.D:	Up to 11,5mm

D-Sub High Density:

Insulator:	PBT, Black, UL94 V-0
Shell:	Stamped Steel, Tin Plated
Contact pins:	Copper Alloy
Stamped & Formed pins:	100 inserts min
Contacts Plating:	Selective Gold over Nickel
Operating Temperature:	-55°C to +105°C
Withstanding voltage:	500V for 1 minute
Insulator resistance:	500MΩ min

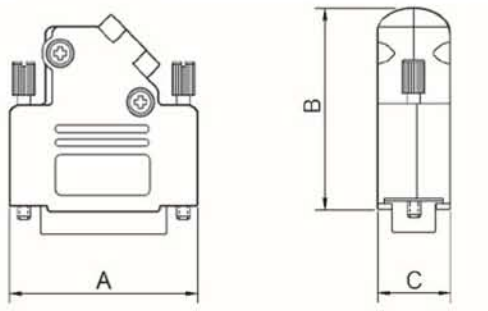

Size D45PK-M	Dim A	Dim B	Dim C
9-way	31,0	36,3	15,0
15-way	39,5	40,3	15,0
25-way	53,2	40,3	15,0
37-way	69,7	40,3	15,0