OMNIMATE Signal - series BL/SL 5.08
SL 5.08HC/04/180B 3.2SN YL BX

Weidmüller Interface GmbH & Co. KG
Klingenbergstraße 16
D-32758 Detmold
Germany
Fon: +49 5231 14-0
Fax: +49 5231 14-292083
www.weidmueller.com

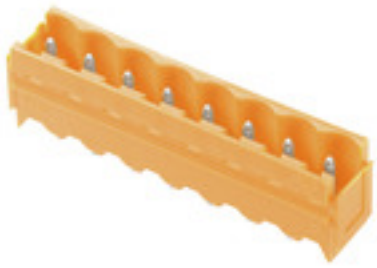

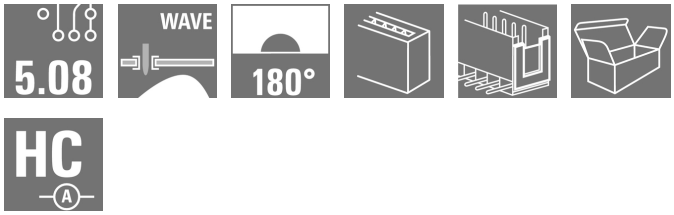

Pin headers in glass-fibre-reinforced plastic with straight wire outlet; optimised for wave soldering. The flange variant (F) can be screwed onto the respective counter piece or the circuit board. There is no need for an extra screw to connect the circuit board when the solder flange (LF) version is used. This also protects the solder points from mechanical strain. All pin headers can be manually coded or ordered pre-coded. HC = High Current.

General ordering data

Type	SL 5.08HC/04/180B 3.2SN YL BX
Order No.	2603530000
Version	PCB plug-in connector, male header, Dovetails for fixing blocks, THT solder connection, 5.08 mm, No. of poles: 4, 180°, Solder pin length (l): 3.2 mm, tinned, yellow, Box
GTIN (EAN)	4050118613780
Qty.	100 pc(s).
Product data	IEC: 400 V / 24 A UL: 300 V / 18.5 A
Packaging	Box

OMNIMATE Signal - series BL/SL 5.08
SL 5.08HC/04/180B 3.2SN YL BX

Weidmüller Interface GmbH & Co. KG
Klingenbergstraße 16
D-32758 Detmold
Germany
Fon: +49 5231 14-0
Fax: +49 5231 14-292083
www.weidmueller.com

Technical data

Dimensions and weights

Height of lowest version	12 mm	Depth	8.5 mm
Depth (inches)	0.335 inch	Net weight	1.514 g

System specifications

Product family	OMNIMATE Signal - series BL/SL 5.08	Type of connection	Board connection
Mounting onto the PCB	THT solder connection	Pitch in mm (P)	5.08 mm
Pitch in inches (P)	0.2 inch	Outgoing elbow	180°
No. of poles	4	Number of solder pins per pole	1
Solder pin length (l)	3.2 mm	Solder pin length tolerance	+0.1 / -0.3 mm
Solder pin dimensions	d = 1.2 mm, Octagonal	Solder pin dimensions = d tolerance	0 / -0,03 mm
L1 in mm	15.24 mm	L1 in inches	0.6 inch
Pin series quantity	1	Can be coded	Yes
Plugging cycles	25	Plugging force/pole, max.	10 N
Pulling force/pole, max.	7.5 N		

Material data

Insulating material	PA GF	Colour	yellow
Colour chart (similar)	RAL 1023	Insulating material group	II
CTI	≥ 550	Insulation strength	≥ 10^8 Ω
UL 94 flammability rating	V-0	GWFI	960 °C
Contact material	CuMg	Contact surface	tinned
Layer structure of solder connection	1-3 µm Ni / 2-4 µm Sn matt	Layer structure of plug contact	1-3 µm Ni / 2-4 µm Sn matt
Storage temperature, min.	-25 °C	Storage temperature, max.	55 °C
Max. relative humidity during storage	80 %	Operating temperature, min.	-50 °C
Operating temperature, max.	100 °C	Temperature range, installation, min.	-25 °C
Temperature range, installation, max.	100 °C		

Rated data acc. to IEC

tested acc. to standard	IEC 60664-1, IEC 61984	Rated current, min. no. of poles (Tu=20°C)	24 A
Rated current, max. no. of poles (Tu=20°C)	19 A	Rated current, min. no. of poles (Tu=40°C)	21 A
Rated current, max. no. of poles (Tu=40°C)	16.5 A	Rated voltage for surge voltage class / pollution degree II/2	400 V
Rated voltage for surge voltage class / pollution degree III/2	320 V	Rated voltage for surge voltage class / pollution degree III/3	250 V
Rated impulse voltage for surge voltage class/ pollution degree II/2	4 kV	Rated impulse voltage for surge voltage class/ pollution degree III/2	4 kV
Rated impulse voltage for surge voltage class/ contamination degree III/3	4 kV		

Rated data acc. to CSA

Rated voltage (Use group B / CSA)	300 V	Rated voltage (Use group D / CSA)	300 V
Rated current (Use group B / CSA)	18.5 A	Rated current (Use group D / CSA)	18.5 A

Rated data acc. to UL 1059

Rated voltage (Use group B / UL 1059)	300 V	Rated voltage (Use group D / UL 1059)	300 V
Rated current (Use group B / UL 1059)	18.5 A	Rated current (Use group D / UL 1059)	10 A

OMNIMATE Signal - series BL/SL 5.08
SL 5.08HC/04/180B 3.2SN YL BX

Weidmüller Interface GmbH & Co. KG
Klingenbergstraße 16
D-32758 Detmold
Germany
Fon: +49 5231 14-0
Fax: +49 5231 14-292083
www.weidmueller.com

Technical data

Packing

Packaging	Box	VPE length	0
VPE width	0	VPE height	0

Classifications

ETIM 4.0	EC002637	ETIM 5.0	EC002637
ETIM 6.0	EC002637	eClass 6.2	27-26-07-04
eClass 9.0	27-44-04-02	eClass 9.1	27-44-04-02

Notes

Notes	
IPC conformity	Conformity: The products are developed, manufactured and delivered according international recognized standards and norms and comply with the assured properties in the data sheet resp. fulfill decorative properties in accordance with IPC-A-610 "Class 2". Further claims on the products can be evaluated on request.

Downloads

Approval/Certificate/Document of Conformity	CB Certificate CB Testreport

OMNIMATE Signal - series BL/SL 5.08
SL 5.08HC/04/180B 3.2SN YL BX

Weidmüller Interface GmbH & Co. KG
Klingenbergstraße 16
D-32758 Detmold
Germany
Fon: +49 5231 14-0
Fax: +49 5231 14-292083
www.weidmueller.com

Drawings

Dimensional drawing

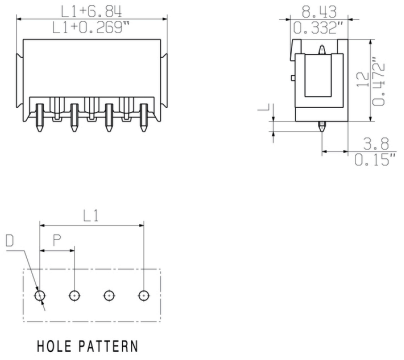

Product benefits

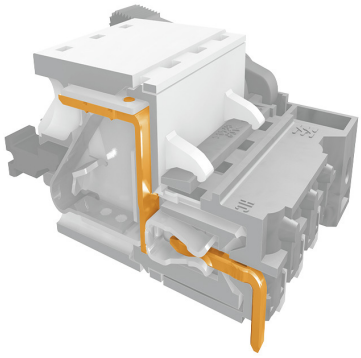

Safe power transmission
Proven properties

Graph

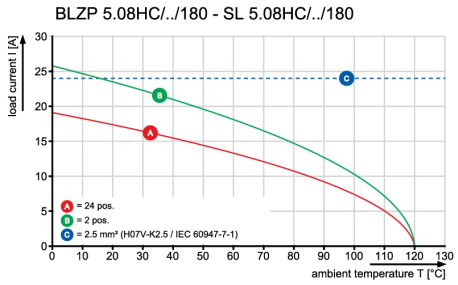

Graph

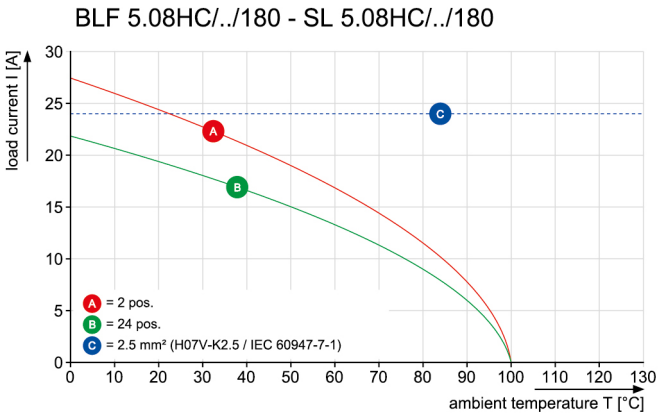

Graph

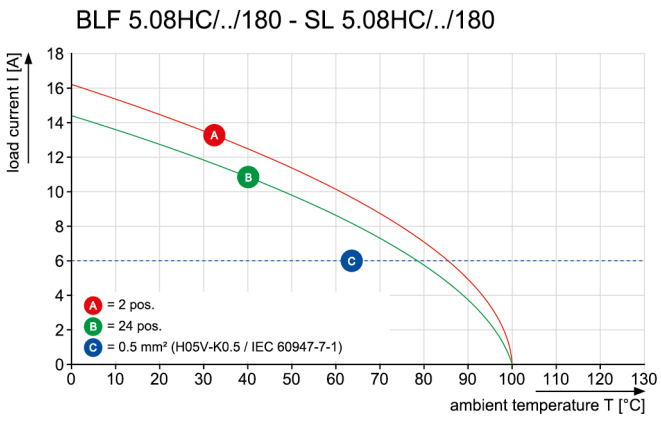

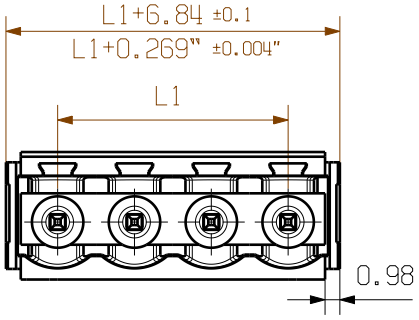

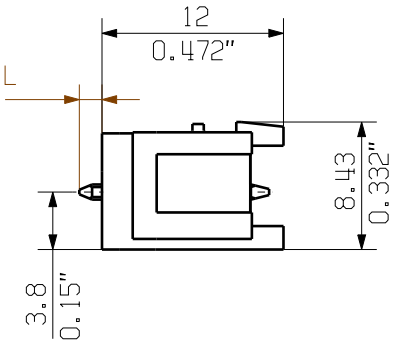

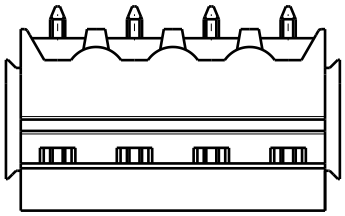

1/1

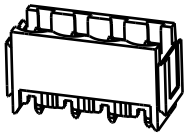

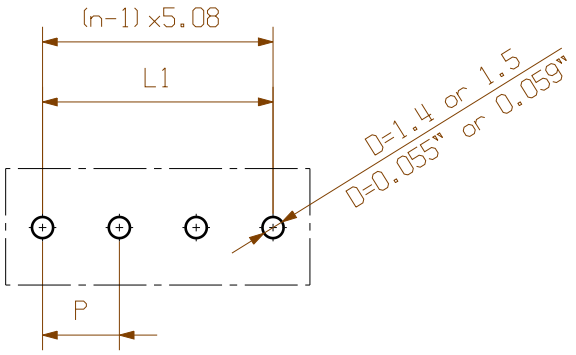

HOLE PATTERN

PCB-Ø 1,4 TILL POLE 8
PCB-Ø 1,5 FROM POLE 9

n	L1 [mm]	L1 [Inch]
24	116,84	4,600
23	111,76	4,400
22	106,68	4,200
21	101,60	4,000
20	96,52	3,800
19	91,44	3,600
18	86,36	3,400
17	81,28	3,200
16	76,20	3,000
15	71,12	2,800
14	66,04	2,600
13	60,96	2,400
12	55,88	2,200
11	50,80	2,000
10	45,72	1,800
9	40,64	1,600
8	35,56	1,400
7	30,48	1,200
6	25,40	1,000
5	20,32	0,800
4	15,24	0,600
3	10,16	0,400
2	5,08	0,200

For the mounting of PCBs, it should be noted that the rated data given in the catalogue relates only to the connection elements. The neccessary creepage and clearance paths must be observed in connection with the respective applicant in accordance to VDE 0110. The current-carrying capacity and pitch tolerance is to be determined according to IEC 60326 part 3 very fine.

Weidmueller connectors are tested to the DIN VDE 0627 standard, and are valid for its field of application. Provided that the connectors are used to the intended purpose, all requirements with respect to the occuring of electrical, mechanical, thermic and corrosive stress will be satisfied.

P=PITCH

SHOWN: SL 5.08HC/04/180B

STIFTLAENGE L PIN LENGTH L	TOLERANZ TOLERANCE
3,2	0,1
	-0,3
4,5	0,1
	-0,3

General tolerance:
DIN ISO 2768-mK

RoHS COMPLIANT

99587/5
22.11.17 HELIS_MA
04
Modification

Weidmüller

Cat.no.: .

3 50953 04
Drawing no. Issue no.

Sheet 02 of 05 sheets

	Date	Name
Drawn	18.02.2011	HERTEL_S
Responsible		HERTEL_S
Checked	30.11.2017	HELIS_MA
Approved		LANG_T

Scale: 2:1

Supersedes: .

SL 5.08HC/../180..

STIFTLEISTE
MALE HEADER

Product file: SL5.08 HC 7377

The reproduction, distribution and utilization of this document as well as the communication of its contents to others without explicit authorization is prohibited.
Offenders will be held liable for the payment of damages. Weidmueller exclusively reserves the right to file for patents, utility models or designs.
© Weidmueller Interface GmbH & Co. KG

Wave Solder Profile

Recommended wave solderding profiles

Weidmüller Interface GmbH & Co. KG
Klingenbergstraße 16
D-32758 Detmold
Germany
Fon: +49 5231 14-0
Fax: +49 5231 14-292083
www.weidmueller.com

Single Wave:

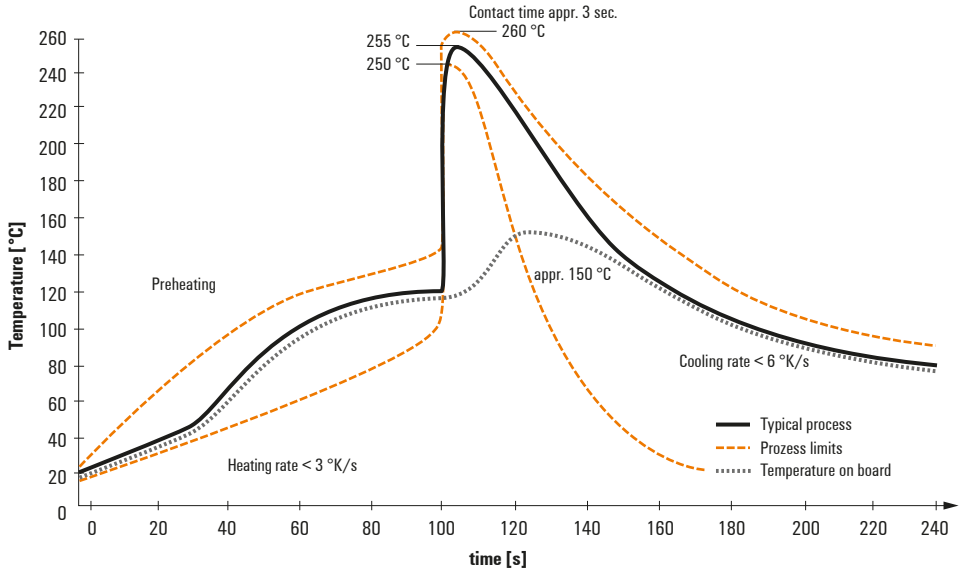

Double Wave:

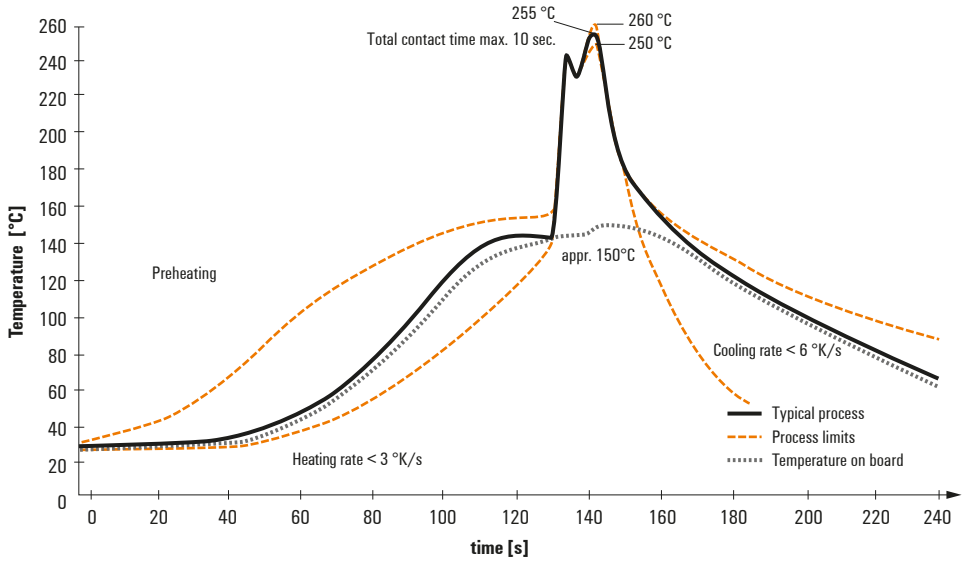

Wave soldering profiles

Wired connection elements should be processed in accordance with the DIN EN 61760-1 standard. We have included two recommendations for practical wave soldering profiles, with which Weidmüller PCB terminals and connectors are qualified.

When choosing a suitable profile for your application, the following factors also need to be considered:
- PCB thickness
- Proportion of Cu in the layers
- Single/double-sided assembly
- Product range
- Heating and cooling rates

The single and double wave profiles each indicate the recommended operating range, including the maximum soldering temperature of 260°C. In practice, the maximum soldering temperature is quite often well below the above maximum profile.

We reserve the right to make technical changes.