OMNIMATE Power - series LL
LLFS 7.50/03/180V 5.0SN BK BX

Weidmüller Interface GmbH & Co. KG
Klingenbergstraße 16
D-32758 Detmold
Germany
Fon: +49 5231 14-0
Fax: +49 5231 14-292083
www.weidmueller.com

Product image



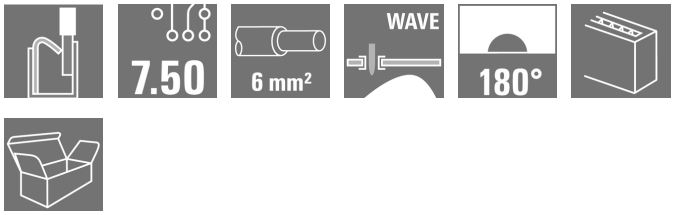

The sturdy, direct connection for extreme current and voltage requirements in all power electronics applications such as solar inverters, frequency converters, servo-controllers and power supplies.

General ordering data

Type	LLFS 7.50/03/180V 5.0SN BK BX
Order No.	2491630000
Version	Printed circuit board terminals, 7.50 mm, No. of poles: 3, 180°, Solder pin length (l): 5 mm, tinned, black, PUSH IN without actuator, Clamping range, max. : 6 mm², Box
GTIN (EAN)	4050118607833
Qty.	80 pc(s).
Product data	IEC: 1000 V / 41 A / 0.5 - 6 mm² UL: 600 V / 37 A / AWG 24 - AWG 8
Packaging	Box

OMNIMATE Power - series LL
LLFS 7.50/03/180V 5.0SN BK BX

Weidmüller Interface GmbH & Co. KG
Klingenbergstraße 16
D-32758 Detmold
Germany
Fon: +49 5231 14-0
Fax: +49 5231 14-292083
www.weidmueller.com

Technical data

Dimensions and weights

Width	24.3 mm	Width (inches)	0.957 inch
Height	29.15 mm	Height (inches)	1.148 inch
Height of lowest version	24.15 mm	Depth	18.5 mm
Depth (inches)	0.728 inch	Net weight	11.03 g

System parameters

Product family	OMNIMATE Power - series LL	Wire connection method	PUSH IN without actuator
Mounting onto the PCB	THT solder connection	Conductor outlet direction	180°
Pitch in mm (P)	7.5 mm	Pitch in inches (P)	0.295 inch
No. of poles	3	Fitted by customer	No
Solder pin length (l)	5 mm	Solder pin dimensions	d = 1.5 mm
Solder eyelet hole diameter (D)	2 mm	Solder eyelet hole diameter tolerance (D)	+ 0,1 mm
Number of solder pins per pole	1	Stripping length	12 mm
L1 in mm	15 mm	L1 in inches	0.591 inch
Touch-safe protection acc. to DIN VDE 0470	IP 20	Touch-safe protection acc. to DIN VDE 57 106	Safe from finger touch

Material data

Insulating material	Wemid (PA)	Colour	black
Colour chart (similar)	RAL 9011	Insulating material group	I
Insulation strength	≥ 10^8 Ω	UL 94 flammability rating	V-0
Contact material	E-Cu	Contact surface	tinned
Layer structure of solder connection	4-10 µ Sn matt	Storage temperature, min.	-40 °C
Storage temperature, max.	85 °C	Max. relative humidity during storage	80 %
Operating temperature, min.	-40 °C	Operating temperature, max.	120 °C

Conductors suitable for connection

Clamping range, min.	0.25 mm²
Clamping range, max.	6 mm²
Wire connection cross section AWG, min.	AWG 24
Wire connection cross section AWG, max.	AWG 8
Solid, min. H05(07) V-U	0.5 mm²
Solid, max. H05(07) V-U	6 mm²
Flexible, min. H05(07) V-K	0.5 mm²
Flexible, max. H05(07) V-K	6 mm²
w. plastic collar ferrule, DIN 46228 pt 4, min.	0.25 mm²
w. plastic collar ferrule, DIN 46228 pt 4, max.	6 mm²
w. wire end ferrule, DIN 46228 pt 1, min	0.25 mm²
w. wire end ferrule, DIN 46228 pt 1, max.	6 mm²

OMNIMATE Power - series LL
LLFS 7.50/03/180V 5.0SN BK BX

Weidmüller Interface GmbH & Co. KG
Klingenbergstraße 16
D-32758 Detmold
Germany
Fon: +49 5231 14-0
Fax: +49 5231 14-292083
www.weidmueller.com

Technical data

Clampable conductor	Cross-section for conductor connection	Type	fine-wired	
		nominal	0.5 mm²	
	AEH	Stripping length	nominal	14 mm
	Cross-section for conductor connection	Type	fine-wired	
		nominal	1 mm²	
	AEH	Stripping length	nominal	15 mm
	Cross-section for conductor connection	Type	fine-wired	
		nominal	1.5 mm²	
	AEH	Stripping length	nominal	15 mm
		Stripping length	nominal	12 mm
	Cross-section for conductor connection	Type	fine-wired	
		nominal	0.75 mm²	
	AEH	Stripping length	nominal	14 mm
	Cross-section for conductor connection	Type	fine-wired	
		nominal	2.5 mm²	
	AEH	Stripping length	nominal	14 mm
		Stripping length	nominal	12 mm
	Cross-section for conductor connection	Type	fine-wired	
		nominal	4 mm²	
	AEH	Stripping length	nominal	12 mm
		Stripping length	nominal	14 mm
	Cross-section for conductor connection	Type	fine-wired	
		nominal	6 mm²	
	AEH	Stripping length	nominal	14 mm
		Stripping length	nominal	12 mm
	Cross-section for conductor connection	Type	fine-wired	
		nominal	10 mm²	
	AEH	Stripping length	nominal	12 mm
Max. clamping range	6 mm²			

Rated data acc. to IEC

tested acc. to standard	In accordance with IEC 60947-7-1	Rated current, min. no. of poles (Tu=20°C)	41 A
Rated current, max. no. of poles (Tu=20°C)	32 A	Rated current, min. no. of poles (Tu=40°C)	38 A
Rated current, max. no. of poles (Tu=40°C)	28 A	Rated voltage for surge voltage class / pollution degree II/2	1,000 V
Rated voltage for surge voltage class / pollution degree III/2	1,000 V	Rated voltage for surge voltage class / pollution degree III/3	1,000 V
Rated impulse voltage for surge voltage class/ pollution degree II/2	8 kV	Rated impulse voltage for surge voltage class/ pollution degree III/2	8 kV
Rated impulse voltage for surge voltage class/ contamination degree III/3	8 kV		

Rated data acc. to CSA

Rated voltage (Use group B / CSA)	600 V	Rated voltage (Use group C / CSA)	600 V
Rated voltage (Use group D / CSA)	600 V	Rated current (Use group B / CSA)	37 A
Rated current (Use group C / CSA)	37 A	Rated current (Use group D / CSA)	5 A

OMNIMATE Power - series LL
LLFS 7.50/03/180V 5.0SN BK BX

Weidmüller Interface GmbH & Co. KG
Klingenbergstraße 16
D-32758 Detmold
Germany
Fon: +49 5231 14-0
Fax: +49 5231 14-292083
www.weidmueller.com

Technical data

Rated data acc. to UL 1059

Institute (cURus)		Certificate No. (cURus)	E60693
Rated voltage (Use group B / UL 1059)	600 V	Rated voltage (Use group C / UL 1059)	600 V
Rated voltage (Use group D / UL 1059)	600 V	Rated current (Use group B / UL 1059)	37 A
Rated current (Use group C / UL 1059)	37 A	Rated current (Use group D / UL 1059)	5 A
Wire cross-section, AWG, min.	AWG 24	Wire cross-section, AWG, max.	AWG 8
Reference to approval values	Specifications are maximum values, details - see approval certificate.		

Packing

Packaging	Box	VPE length	0 m
VPE width	0 m	VPE height	0 m

Classifications

ETIM 3.0	EC001284	ETIM 4.0	EC002643
ETIM 5.0	EC002643	ETIM 6.0	EC002643
eClass 6.2	27-26-11-01	eClass 9.0	27-44-04-01
eClass 9.1	27-44-04-01		

Notes

Notes	• Additional colours on request • Rated current related to rated cross-section & min. No. of poles. • Wire end ferrule without plastic collar to DIN 46228/1 • Wire end ferrule with plastic collar to DIN 46228/4 • P on drawing = pitch • Rated data refer only to the component itself. Clearance and creepage distances to other components are to be designed in accordance with the relevant application standards. • The test point can only be used as potential-pickup point.
IPC conformity	Conformity: The products are developed, manufactured and delivered according international recognized standards and norms and comply with the assured properties in the data sheet resp. fulfill decorative properties in accordance with IPC-A-610 "Class 2". Further claims on the products can be evaluated on request.

Approvals

Approvals	

OMNIMATE Power - series LL
LLFS 7.50/03/180V 5.0SN BK BX

Weidmüller Interface GmbH & Co. KG
Klingenbergstraße 16
D-32758 Detmold
Germany
Fon: +49 5231 14-0
Fax: +49 5231 14-292083
www.weidmueller.com

Technical data

Downloads

Approval/Certificate/Document of Conformity	Declaration of the Manufacturer
Engineering Data	STEP
Motion controllers white paper	Download Whitepaper
White Paper UL 600 V	Download Whitepaper

OMNIMATE Power - series LL
LLFS 7.50/03/180V 5.0SN BK BX

Weidmüller Interface GmbH & Co. KG
Klingenbergstraße 16
D-32758 Detmold
Germany
Fon: +49 5231 14-0
Fax: +49 5231 14-292083
www.weidmueller.com

Drawings

Dimensional drawing

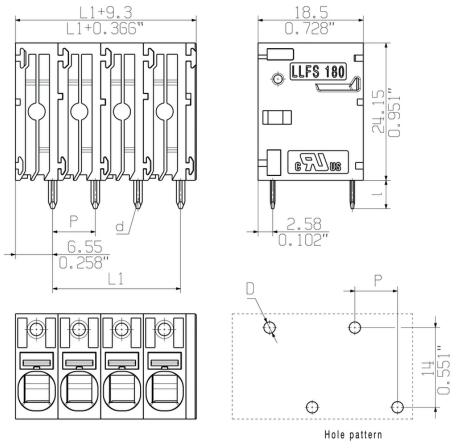

Derating curve

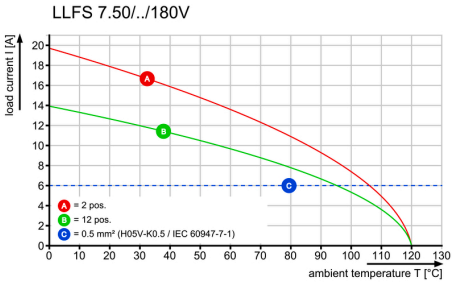

Derating curve

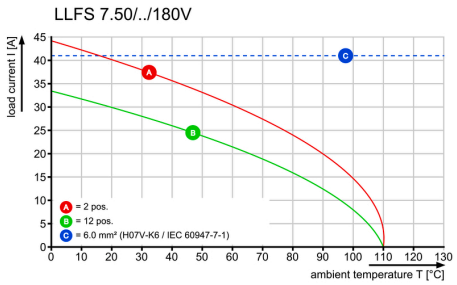

Product benefits

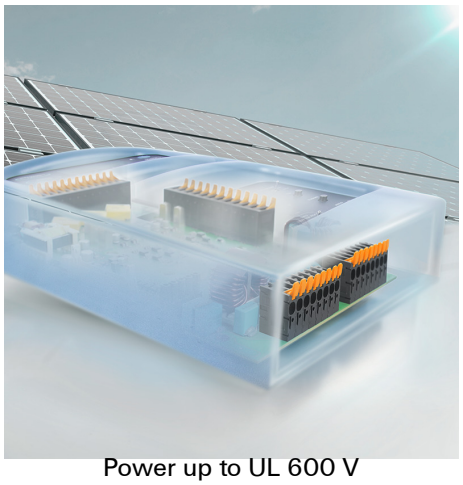

Power up to UL 600 V
Offset solder pins

Product benefits



Tool-free wiring
Top contact security

Creation date May 27, 2019 6:56:46 PM CEST

The reproduction, distribution and utilization of this document as well as the communication of its contents to others without explicit authorization is prohibited.
Offenders will be held liable for the payment of damages. Weidmueller exclusively reserves the right to file for patents, utility models or designs.
© Weidmueller Interface GmbH & Co. KG

Dimensions without tolerances are no check dimensions

The English version is binding

04

General customer drawing, topical version only if required

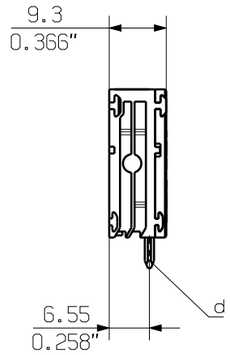

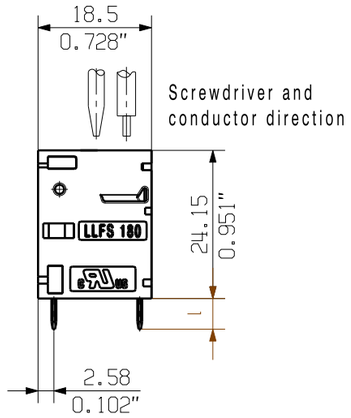

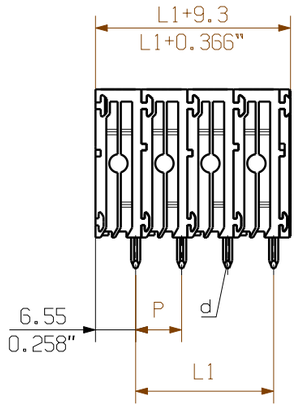

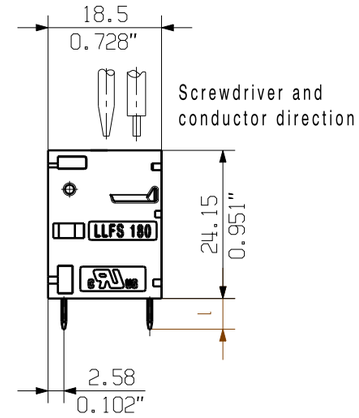

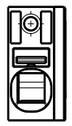

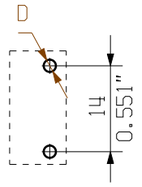

Hole pattern

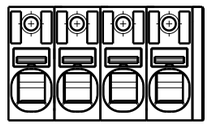

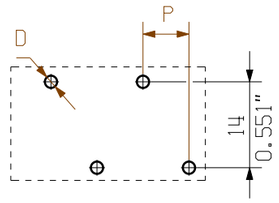

Hole pattern

For the mounting of PCBs, it should be noted that the rated data relates only to the PCB components alone.
The neccessary creepage and clearance paths must be observed in connection with the respective applicant in accordance to IEC 664 / VDE 0110.
The current-carrying capacity and pitch tolerance is to be determined according to DIN IEC 326 part 3 very fine.

Weidmüller PCB components are tested to the DIN EN 61984
standard, and are valid for its field of application.
Provided that the components are used to the intended purpose, all requirements with respect to the occuring of electrical, mechanical, thermic and corrosive stress will be satisfied.

P = 7.50 / 0.295" (Pitch)
D = Ø2 +0.1 / 0.079"
d = 1.5x0.8 / 0.059"x0.031"
l = 5.0 +0.2 -0.6 / 0.197"

n Poles	L1 [mm]	L1 [inch]
12	82.50	3.248
11	75.00	2.953
10	67.50	2.657
9	60.00	2.362
8	52.50	2.067
7	45.00	1.772
6	37.50	1.476
5	30.00	1.181
4	22.50	0.886
3	15.00	0.591
2	7.50	0.295

General tolerance:
DIN ISO 2768-mK

RoHS COMPLIANT

95864/4
14.07.17 XIANG_K 01
.
Modification

. .

Cat.no.: .

Weidmüller

3 64139 04
Drawing no. Issue no.

Sheet 01 of 01 sheets

	Date	Name
Drawn	22.09.2016	HILDEBRANDT_R
Responsible		WRIGHT_ST
Checked	14.07.2017	ZHOU_N
Approved		NOLTE_S

Scale: 1/1

Supersedes: .

LLFS 7.50/.../180 ...
LEITERPLATTENKLEMME
PCB TERMINAL

Product file: LLF 7.50 7416

Wave Solder Profile

Recommended wave solderding profiles

Weidmüller Interface GmbH & Co. KG
Klingenbergstraße 16
D-32758 Detmold
Germany
Fon: +49 5231 14-0
Fax: +49 5231 14-292083
www.weidmueller.com

Single Wave:

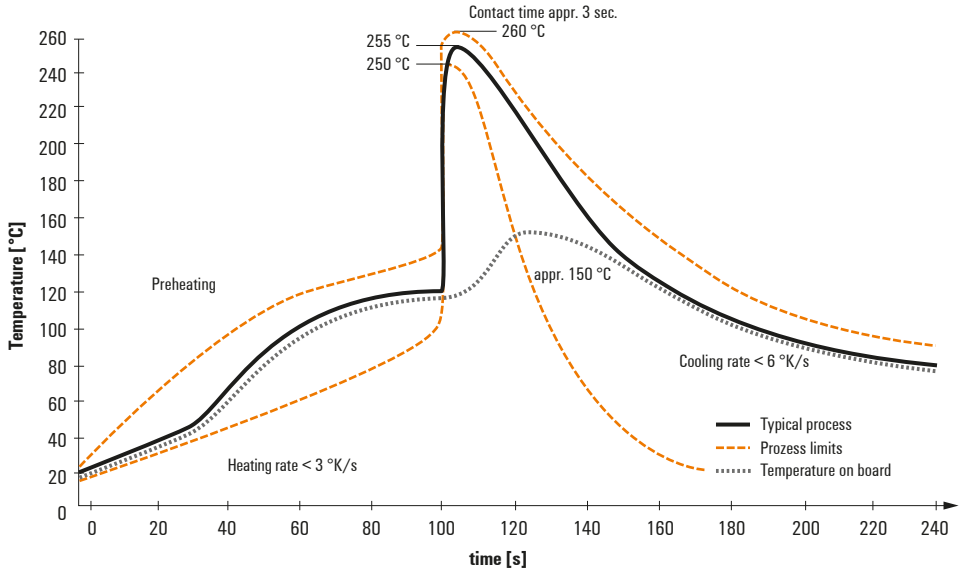

Double Wave:

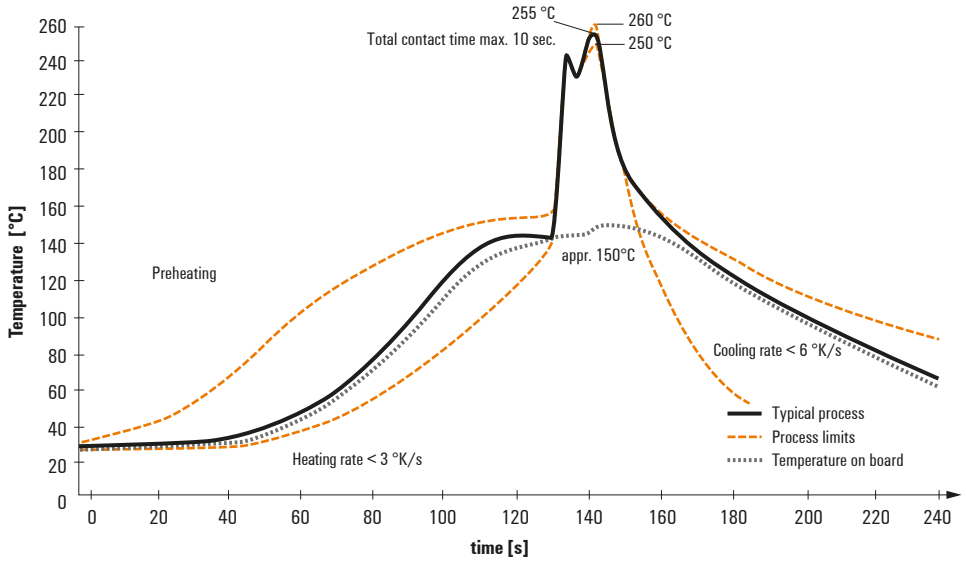

Wave soldering profiles

Wired connection elements should be processed in accordance with the DIN EN 61760-1 standard. We have included two recommendations for practical wave soldering profiles, with which Weidmüller PCB terminals and connectors are qualified.

When choosing a suitable profile for your application, the following factors also need to be considered:
- PCB thickness
- Proportion of Cu in the layers
- Single/double-sided assembly
- Product range
- Heating and cooling rates

The single and double wave profiles each indicate the recommended operating range, including the maximum soldering temperature of 260°C. In practice, the maximum soldering temperature is quite often well below the above maximum profile.

We reserve the right to make technical changes.