OMNIMATE Signal - series BL/SL 5.08
SLF 5.08/06/180DF SN OR BX

Weidmüller Interface GmbH & Co. KG
Klingenbergstraße 16
D-32758 Detmold
Germany
Fon: +49 5231 14-0
Fax: +49 5231 14-292083
www.weidmueller.com

Product image

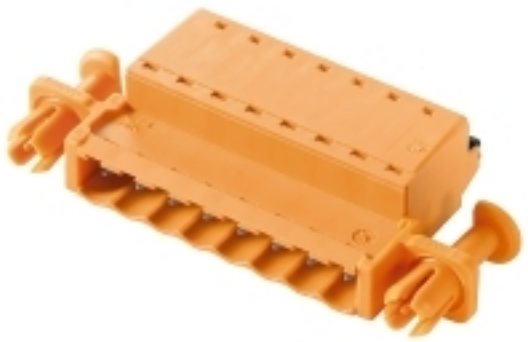

Similar to illustration

Male plug with PUSH IN wire connection and straight outlet direction, when used with BLF 5.08HC as wire-to-wire application for panel feed-through The male plugs provide space for labelling and can be coded.

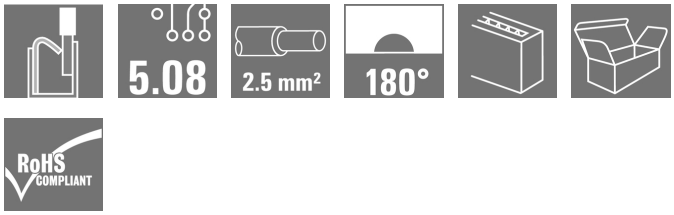

General ordering data

Type	SLF 5.08/06/180DF SN OR BX
Order No.	1353630000
Version	PCB plug-in connector, male plug, 5.08 mm, No. of poles: 6, 180°, PUSH IN, Tension-clamp connection, Clamping range, max. : 3.31 mm², Box
GTIN (EAN)	4050118156393
Qty.	30 pc(s).
Product data	IEC: 400 V / 25.9 A / 0.2 - 2.5 mm² UL: 300 V / 14 A / AWG 26 - AWG 12
Packaging	Box

OMNIMATE Signal - series BL/SL 5.08
SLF 5.08/06/180DF SN OR BX

Weidmüller Interface GmbH & Co. KG
Klingenbergstraße 16
D-32758 Detmold
Germany
Fon: +49 5231 14-0
Fax: +49 5231 14-292083
www.weidmueller.com

Technical data

Dimensions and weights

Height	14.2 mm	Height (inches)	0.559 inch
Depth	31 mm	Depth (inches)	1.22 inch
Net weight	14.63 g		

system parameters

Product family	OMNIMATE Signal - series BL/SL 5.08	Type of connection	Field connection
Wire connection method	PUSH IN, Tension-clamp connection	Pitch in mm (P)	5.08 mm
Pitch in inches (P)	0.2 inch	Conductor outlet direction	180°
No. of poles	6	L1 in mm	25.4 mm
L1 in inches	1 inch	Pin series quantity	1
Rated cross-section	2.5 mm²	Touch-safe protection acc. to DIN VDE 57 106	finger-safe plugged/ back-of-hand-safe unplugged
Volume resistance	4.50 mΩ	Can be coded	Yes
Stripping length	10 mm	Screwdriver blade	0.6 x 3.5
Screwdriver blade standard	DIN 5264	Plugging cycles	25
Plugging force/pole, max.	7 N	Pulling force/pole, max.	5.5 N

Material data

Insulating material	PBT	Colour	orange
Colour of operational elements	black	Colour chart (similar)	RAL 2000
Insulation strength	≥ 10^8 Ω	UL 94 flammability rating	V-0
GWFI	960 °C	Contact material	CuSn
Contact surface	tinned	Layer structure of plug contact	4-8 µm Sn hot-dip tinned
Storage temperature, min.	-25 °C	Storage temperature, max.	55 °C
Max. relative humidity during storage	80 %	Operating temperature, min.	-50 °C
Operating temperature, max.	100 °C	Temperature range, installation, min.	-25 °C
Temperature range, installation, max.	100 °C		

Conductors suitable for connection

Clamping range, min.	0.13 mm²
Clamping range, max.	3.31 mm²
Wire connection cross section AWG, min.	AWG 26
Wire connection cross section AWG, max.	AWG 12
Solid, min. H05(07) V-U	0.2 mm²
Solid, max. H05(07) V-U	2.5 mm²
Flexible, min. H05(07) V-K	0.2 mm²
Flexible, max. H05(07) V-K	2.5 mm²
w. plastic collar ferrule, DIN 46228 pt 4, min.	0.2 mm²
w. plastic collar ferrule, DIN 46228 pt 4, max.	2.5 mm²
w. wire end ferrule, DIN 46228 pt 1, min	0.2 mm²
w. wire end ferrule, DIN 46228 pt 1, max.	2.5 mm²
Plug gauge in accordance with EN 60999 a x b; ø	2.8 mm x 2.0 mm

OMNIMATE Signal - series BL/SL 5.08
SLF 5.08/06/180DF SN OR BX

Weidmüller Interface GmbH & Co. KG
Klingenbergstraße 16
D-32758 Detmold
Germany
Fon: +49 5231 14-0
Fax: +49 5231 14-292083
www.weidmueller.com

Technical data

Clampable conductor	Cross-section for conductor connection	Type	fine-wired	
		nominal	0.5 mm²	
	AEH	Stripping length	nominal	12 mm
		Stripping length	nominal	10 mm
	Cross-section for conductor connection	Type	fine-wired	
		nominal	0.75 mm²	
	AEH	Stripping length	nominal	12 mm
		Stripping length	nominal	10 mm
	Cross-section for conductor connection	Type	fine-wired	
		nominal	1 mm²	
	AEH	Stripping length	nominal	12 mm
		Stripping length	nominal	10 mm
	Cross-section for conductor connection	Type	fine-wired	
		nominal	1.5 mm²	
	AEH	Stripping length	nominal	10 mm
		Stripping length	nominal	12 mm
	Cross-section for conductor connection	Type	fine-wired	
		nominal	2.5 mm²	
	AEH	Stripping length	nominal	10 mm
Reference text	The outside diameter of the plastic collar should not be larger than the pitch (P).			
Max. clamping range	3.31 mm²			

Rated data acc. to IEC

tested acc. to standard	IEC 60664-1, IEC 61984	Rated current, min. no. of poles (Tu=20°C)	25.9 A
Rated current, max. no. of poles (Tu=20°C)	21.7 A	Rated current, min. no. of poles (Tu=40°C)	22.5 A
Rated current, max. no. of poles (Tu=40°C)	18.5 A	Rated voltage for surge voltage class / pollution degree II/2	400 V
Rated voltage for surge voltage class / pollution degree III/2	320 V	Rated voltage for surge voltage class / pollution degree III/3	250 V
Rated impulse voltage for surge voltage class/ pollution degree II/2	4 kV	Rated impulse voltage for surge voltage class/ pollution degree III/2	4 kV
Rated impulse voltage for surge voltage class/ contamination degree III/3	4 kV	Short-time withstand current resistance	3 x 1s with 120 A

Rated data acc. to CSA

Rated voltage (Use group B / CSA)	300 V	Rated voltage (Use group D / CSA)	300 V
Rated current (Use group B / CSA)	10 A	Rated current (Use group D / CSA)	10 A
Wire cross-section, AWG, min.	AWG 26	Wire cross-section, AWG, max.	AWG 12

Rated data acc. to UL 1059

Institute (cURus)		Certificate No. (cURus)	E60693
Rated voltage (Use group B / UL 1059)	300 V	Rated voltage (Use group D / UL 1059)	300 V
Rated current (Use group B / UL 1059)	14 A	Rated current (Use group D / UL 1059)	10 A
Wire cross-section, AWG, min.	AWG 26	Wire cross-section, AWG, max.	AWG 12
Reference to approval values	Specifications are maximum values, details - see approval certificate.		

OMNIMATE Signal - series BL/SL 5.08
SLF 5.08/06/180DF SN OR BX

Weidmüller Interface GmbH & Co. KG
Klingenbergstraße 16
D-32758 Detmold
Germany
Fon: +49 5231 14-0
Fax: +49 5231 14-292083
www.weidmueller.com

Technical data

Packing

Packaging	Box	VPE length	30 mm
VPE width	135 mm	VPE height	350 mm

Classifications

ETIM 4.0	EC002637	ETIM 5.0	EC002637
ETIM 6.0	EC002638	eClass 6.2	27-26-07-04
eClass 7.1	27-44-04-02	eClass 8.1	27-44-04-02
eClass 9.0	27-44-03-09	eClass 9.1	27-44-03-09

Notes

Notes	• Additional colours on request • Gold-plated contact surfaces on request • Rated current related to rated cross-section & min. No. of poles. • Wire end ferrule without plastic collar to DIN 46228/1 • Wire end ferrule with plastic collar to DIN 46228/4 • P on drawing = pitch
IPC conformity	Conformity: The products are developed, manufactured and delivered according international recognized standards and norms and comply with the assured properties in the data sheet resp. fulfill decorative properties in accordance with IPC-A-610 "Class 2". Further claims on the products can be evaluated on request.

Approvals

Approvals	
ROHS	Conform

Downloads

Approval/Certificate/Document of Conformity	Declaration of the Manufacturer
Brochure/Catalogue	FL DRIVES EN MB DEVICE MANUF. EN FL DRIVES DE CAT 2 PORTFOLIOGUIDE EN FL BUILDING SAFETY EN FL APPL LED LIGHTING EN FL INDUSTR.CONTROLS EN FL MACHINE SAFETY EN FL HEATING ELECTR EN FL APPL_INVERTER EN FL_BASE_STATION_EN FL ELEVATOR EN FL POWER SUPPLY EN FL 72H SAMPLE SER EN PO OMNIMATE EN
White Paper wire connection	Download Whitepaper

OMNIMATE Signal - series BL/SL 5.08
SLF 5.08/06/180DF SN OR BX

Weidmüller Interface GmbH & Co. KG
Klingenbergstraße 16
D-32758 Detmold
Germany
Fon: +49 5231 14-0
Fax: +49 5231 14-292083
www.weidmueller.com

Drawings

Dimensional drawing

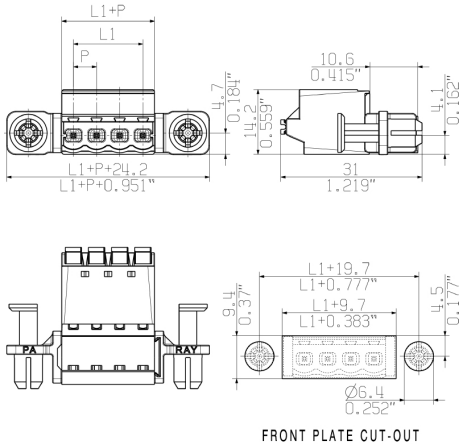

Graph

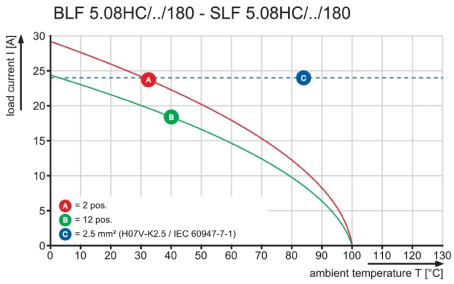

Graph

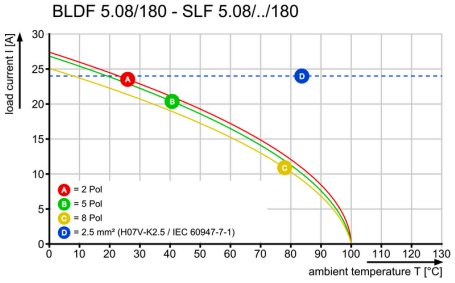

Product benefits

Uncompromising functionality
High vibration resistance

Product benefits

Solid PUSH IN contact
Safe and durable

Product benefits

Lower assembly costs
Secure in a matter of seconds

OMNIMATE Signal - series BL/SL 5.08
SLF 5.08/06/180DF SN OR BX

Weidmüller Interface GmbH & Co. KG
Klingenbergstraße 16
D-32758 Detmold
Germany
Fon: +49 5231 14-0
Fax: +49 5231 14-292083
www.weidmueller.com

Drawings

Product benefits

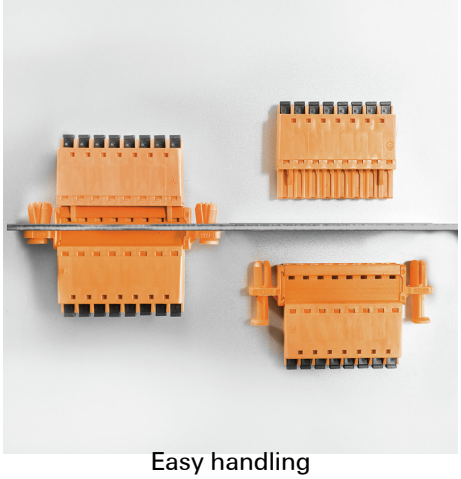

Easy handling
No implementation framework necessary