OMNIMATE Signal - series LSF
LSF-SMD 5.00/02/180 SN BK RL

Weidmüller Interface GmbH & Co. KG
Klingenbergstraße 16
D-32758 Detmold
Germany
Fon: +49 5231 14-0
Fax: +49 5231 14-292083
www.weidmueller.com

Product image

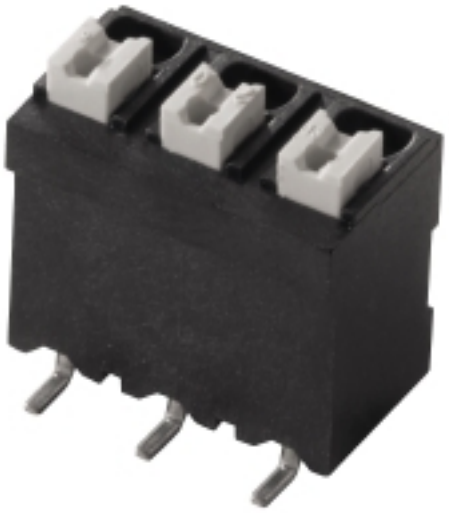

Similar to illustration

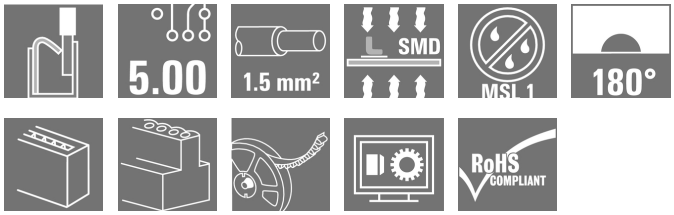

The innovative quick connector - simple, safe and economical:
PCB terminals with spring connection and direct PUSH IN technology. A milestone in connection technology. Amazingly simple and simply amazing in practice:

- Connect and easily detach solid wires or wires with wire-end ferrules without using tools
- Processed automatically in the reflow or vapour phase
- Potentials and clamping points marked clearly by coloured push buttons

World-class design-in and processing phases, and suitable for a vast range of applications.**PCB terminal for fully automatic assembly using reflow soldering (SMD), with PUSH IN wire connections. Conductor insertion and slider operation from the same direction (TOP).**

- **Solid & flexible conductors with wire-end ferrules need only to be inserted and they are ready.**
- **When connecting stranded wires without wire-end ferrules the actuating element is used to open the terminal point**
- **Intuitive handling – since the wire-entry area and handling area are clearly separated.**
- **Packaged in tape-on-reel**
- **Conductor outlet direction 180°**

General ordering data

Type	LSF-SMD 5.00/02/180 SN BK RL
Order No.	1473560000
Version	Printed circuit board terminals, 5.00 mm, No. of poles: 2, 180°, black, PUSH IN, Clamping range, max. : 1.5 mm², Tape
GTIN (EAN)	4050118279962
Qty.	235 pc(s).
Product data	IEC: 500 V / 17.5 A / 0.2 - 1.5 mm² UL: 300 V / 12 A / AWG 28 - AWG 14
Packaging	Tape

OMNIMATE Signal - series LSF
LSF-SMD 5.00/02/180 SN BK RL

Weidmüller Interface GmbH & Co. KG
Klingenbergstraße 16
D-32758 Detmold
Germany
Fon: +49 5231 14-0
Fax: +49 5231 14-292083
www.weidmueller.com

Technical data

Dimensions and weights

Width	9.2 mm	Width (inches)	0.362 inch
Height	16.3 mm	Height (inches)	0.642 inch
Height of lowest version	16.3 mm	Depth	10.5 mm
Depth (inches)	0.413 inch	Net weight	2.66 g

System parameters

Product family	OMNIMATE Signal - series LSF	Wire connection method	PUSH IN
Mounting onto the PCB	SMD solder connection	Conductor outlet direction	180°
Pitch in mm (P)	5 mm	Pitch in inches (P)	0.197 inch
No. of poles	2	Fitted by customer	No
Coplanarity:	100 µm	Number of solder pins per pole	2
Stripping length	8 mm	L1 in mm	5 mm
L1 in inches	0.197 inch	Touch-safe protection acc. to DIN VDE 0470	IP 20
Touch-safe protection acc. to DIN VDE 57 106	Safe from finger touch	Volume resistance	1.60 mΩ

Material data

Insulating material	LCP GF	Colour	black
Colour of operational elements	white	Material of operational elements	PPA GF
Colour chart (similar)	RAL 9011	Insulating material group	IIIa
CTI	≥ 175	Insulation strength	≥ 10^8 Ω
Moisture Level (MSL)	1	UL 94 flammability rating	V-0
Contact material	Copper alloy	Layer structure of solder connection	4-6 µm Sn matt
Storage temperature, min.	-25 °C	Storage temperature, max.	55 °C
Max. relative humidity during storage	80 %	Operating temperature, min.	-50 °C
Operating temperature, max.	120 °C	Temperature range, installation, min.	-30 °C
Temperature range, installation, max.	120 °C		

Conductors suitable for connection

Clamping range, min.	0.13 mm²
Clamping range, max.	1.5 mm²
Wire connection cross section AWG, min.	AWG 28
Wire connection cross section AWG, max.	AWG 14
Solid, min. H05(07) V-U	0.2 mm²
Solid, max. H05(07) V-U	1.5 mm²
Flexible, min. H05(07) V-K	0.2 mm²
Flexible, max. H05(07) V-K	1.5 mm²
w. plastic collar ferrule, DIN 46228 pt 4, min.	0.25 mm²
w. plastic collar ferrule, DIN 46228 pt 4, max.	0.75 mm²
w. wire end ferrule, DIN 46228 pt 1, min	0.25 mm²
w. wire end ferrule, DIN 46228 pt 1, max.	1.5 mm²

OMNIMATE Signal - series LSF
LSF-SMD 5.00/02/180 SN BK RL

Weidmüller Interface GmbH & Co. KG
Klingenbergstraße 16
D-32758 Detmold
Germany
Fon: +49 5231 14-0
Fax: +49 5231 14-292083
www.weidmueller.com

Technical data

Clampable conductor	Cross-section for conductor connection	Type	fine-wired	
		nominal	0.25 mm²	
	AEH	Stripping length	nominal	10 mm
	Cross-section for conductor connection	Type	fine-wired	
		nominal	0.34 mm²	
	AEH	Stripping length	nominal	10 mm
	Cross-section for conductor connection	Type	fine-wired	
		nominal	0.5 mm²	
	AEH	Stripping length	nominal	10 mm
	Cross-section for conductor connection	Type	fine-wired	
		nominal	0.75 mm²	
	AEH	Stripping length	nominal	10 mm
	Cross-section for conductor connection	Type	fine-wired	
		nominal	1.5 mm²	
	AEH	Stripping length	nominal	7 mm
Max. clamping range	1.5 mm²			

Rated data acc. to IEC

tested acc. to standard	IEC 60664-1, IEC 61984	Rated current, min. no. of poles (Tu=20°C)	17.5 A
Rated current, max. no. of poles (Tu=20°C)	17.5 A	Rated current, min. no. of poles (Tu=40°C)	17.5 A
Rated current, max. no. of poles (Tu=40°C)	15 A	Rated voltage for surge voltage class / pollution degree II/2	500 V
Rated voltage for surge voltage class / pollution degree III/2	320 V	Rated voltage for surge voltage class / pollution degree III/3	250 V
Rated impulse voltage for surge voltage class/ pollution degree II/2	4 kV	Rated impulse voltage for surge voltage class/ pollution degree III/2	4 kV
Rated impulse voltage for surge voltage class/ contamination degree III/3	4 kV	Short-time withstand current resistance	3 x 1s with 80 A

Rated data acc. to CSA

Institute (CSA)		Certificate No. (CSA)	200039-1664286
Rated voltage (Use group B / CSA)	300 V	Rated voltage (Use group D / CSA)	300 V
Rated current (Use group B / CSA)	10 A	Rated current (Use group D / CSA)	10 A
Wire cross-section, AWG, min.	AWG 28	Wire cross-section, AWG, max.	AWG 14
Reference to approval values	Specifications are maximum values, details - see approval certificate.		

Rated data acc. to UL 1059

Institute (cURus)		Certificate No. (cURus)	E60693
Rated voltage (Use group B / UL 1059)	300 V	Rated voltage (Use group D / UL 1059)	300 V
Rated current (Use group B / UL 1059)	12 A	Rated current (Use group D / UL 1059)	10 A
Wire cross-section, AWG, min.	AWG 28	Wire cross-section, AWG, max.	AWG 14
Reference to approval values	Specifications are maximum values, details - see approval certificate.		

OMNIMATE Signal - series LSF
LSF-SMD 5.00/02/180 SN BK RL

Weidmüller Interface GmbH & Co. KG
Klingenbergstraße 16
D-32758 Detmold
Germany
Fon: +49 5231 14-0
Fax: +49 5231 14-292083
www.weidmueller.com

Technical data

Packing

Packaging	Tape	VPE length	25 mm
VPE width	330 mm	VPE height	330 mm
Tape depth (T2)	17.1 mm	Tape width (W)	24 mm
Tape pocket depth (K0)	16.6 mm	Tape pocket height (A0)	11.2 mm
Tape pocket width (B0)	9.5 mm	Tape pocket separation (P1)	16 mm
Tape hole separation (E)	1.75 mm	Tape pocket separation (F)	11.5 mm
Tape reel diameter ⌀ (A)	330 mm	Surface resistance	Rs = 10^9 - 10^{12} Ω
Width Pick & Place Pad (W_{PPP})	7.5 mm	Length Pick & Place Pad (L_{PPP})	8.5 mm
Diameter of the withdrawal surface (ø D_{max})	9 mm		

Classifications

ETIM 3.0	EC001284	ETIM 4.0	EC002643
ETIM 5.0	EC002643	ETIM 6.0	EC002643
eClass 6.2	27-26-11-01	eClass 7.1	27-44-04-01
eClass 8.1	27-44-04-01	eClass 9.0	27-44-04-01
eClass 9.1	27-44-04-01		

Notes

Notes

- Additional push button colours on request
- Operating force of slider max. 40 N
- Rated current related to rated cross-section & min. No. of poles.
- Wire end ferrule with plastic collar to DIN 46228/4
- Wire end ferrule without plastic collar to DIN 46228/1
- P on drawing = pitch
- Rated data refer only to the component itself. Clearance and creepage distances to other components are to be designed in accordance with the relevant application standards.
- Crimping shape "A" for wire end ferrules with PZ 6/5 crimping tool are recommended for the largest cable sizes.

IPC conformity: Conformity: The products are developed, manufactured and delivered according international recognized standards and norms and comply with the assured properties in the data sheet resp. fulfill decorative properties in accordance with IPC-A-610 "Class 2". Further claims on the products can be evaluated on request.

Approvals

Approvals

ROHS: Conform

OMNIMATE Signal - series LSF
LSF-SMD 5.00/02/180 SN BK RL

Weidmüller Interface GmbH & Co. KG
Klingenbergstraße 16
D-32758 Detmold
Germany
Fon: +49 5231 14-0
Fax: +49 5231 14-292083
www.weidmueller.com

Technical data

Downloads

Approval/Certificate/Document of Conformity	Declaration of the Manufacturer
Brochure/Catalogue	FL DRIVES EN PI OMNIMATE LSF SMD EN FL ANALO.SIGN.CONV. EN MB DEVICE MANUF. EN FL DRIVES DE FL BUILDING SAFETY EN FL APPL LED LIGHTING EN FL INDUSTR.CONTROLS EN FL MACHINE SAFETY EN FL HEATING ELECTR EN FL APPL_INVERTER EN FL_BASE_STATION_EN FL ELEVATOR EN FL POWER SUPPLY EN FL 72H SAMPLE SER EN PO OMNIMATE EN
Engineering Data	EPLAN, WSCAD
Engineering Data	STEP
SMT white paper	Download Whitepaper

OMNIMATE Signal - series LSF
LSF-SMD 5.00/02/180 SN BK RL

Weidmüller Interface GmbH & Co. KG
Klingenbergstraße 16
D-32758 Detmold
Germany
Fon: +49 5231 14-0
Fax: +49 5231 14-292083
www.weidmueller.com

Drawings

Dimensional drawing

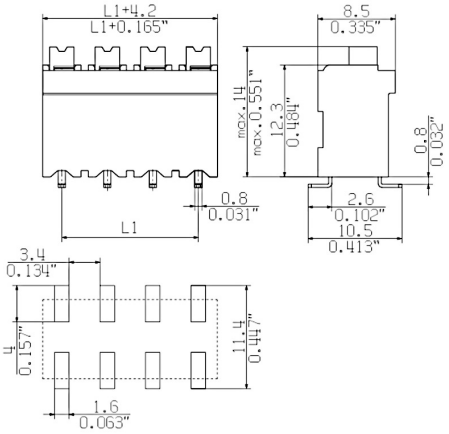

Graph

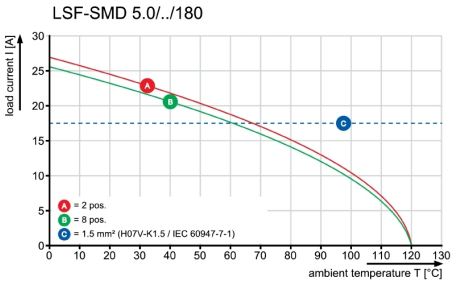

Product benefits

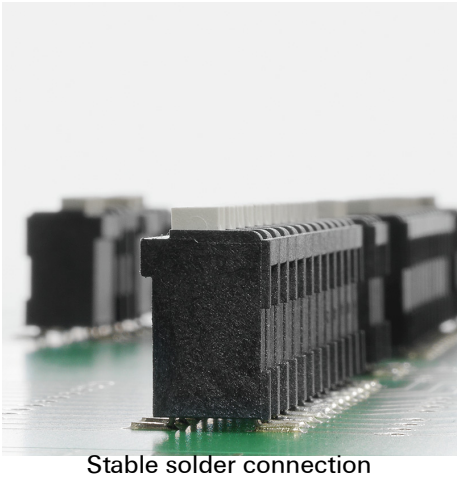

Stable solder connection

Product benefits

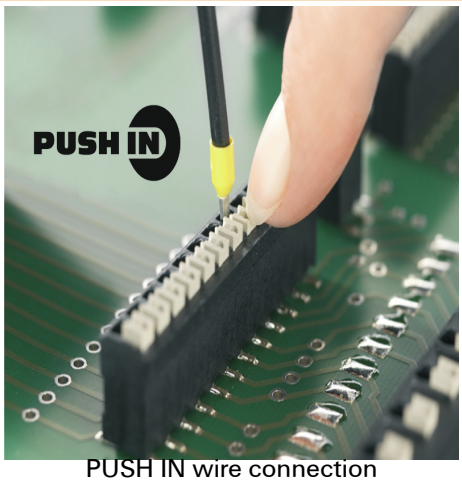

PUSH IN wire connection

Product benefits



Packaged in tape-on-reel

OMNIMATE Signal - series LSF
LSF-SMD 5.00/02/180 SN BK RL

Weidmüller Interface GmbH & Co. KG
Klingenbergstraße 16
D-32758 Detmold
Germany
Fon: +49 5231 14-0
Fax: +49 5231 14-292083
www.weidmueller.com

Drawings

Dimensional drawing

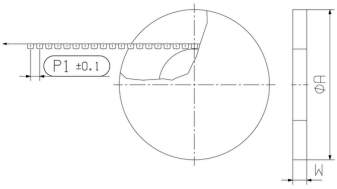

Dimensional drawing

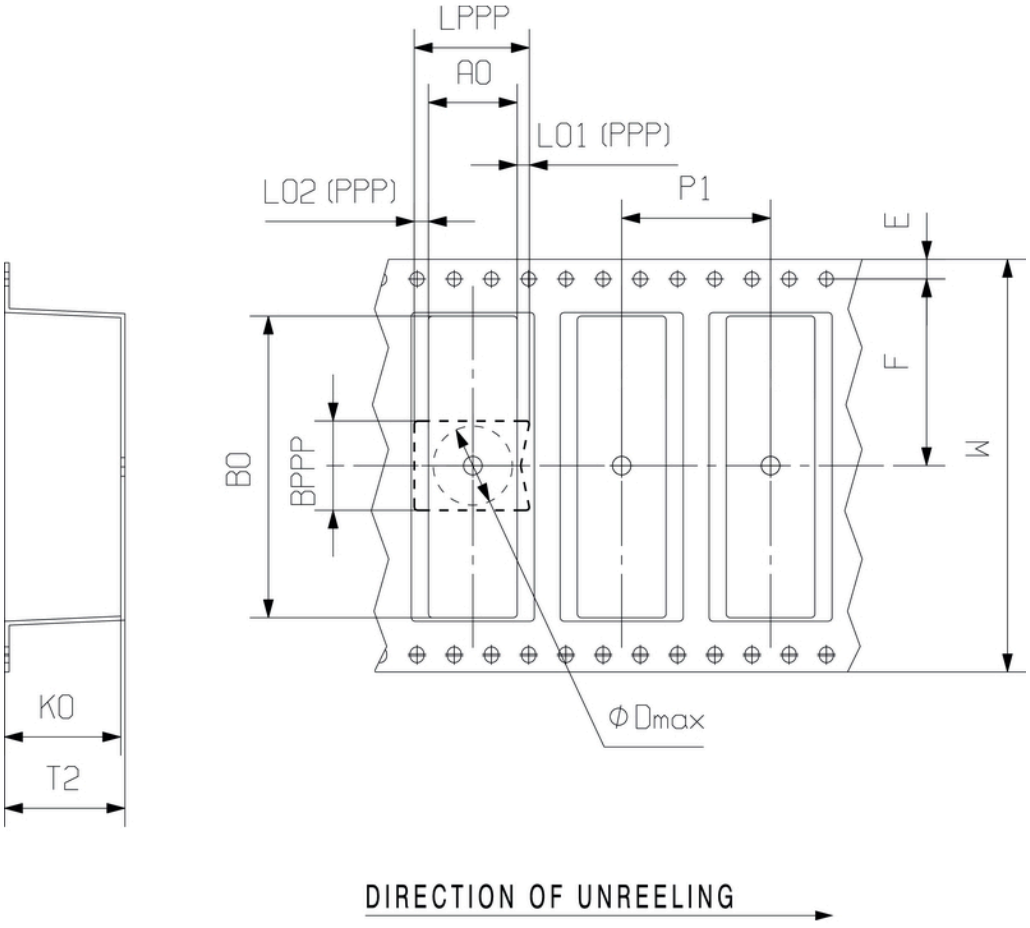

MASSE OHNE TOLERANZ SIND KEINE PRUEFMASSE
DIMS. WITHOUT TOLERANCE ARE NOT CONTROL DIMS.

DIE DEUTSCHE VERSION IST VERBINDLICH
THE GERMAN VERSION IS BINDING

WEITERGABE SOWIE VERVIELFAELTIGUNG DIESES DOKUMENTS, VERWERTUNG UND MITTEILUNG SEINES INHALTS SIND VERBOTEN, SOWEIT NICHT AUSDRUECKLICH GESTATTET.
ZUWIDERHANDLUNGEN VERPFLICHTEN ZU SCHADENERSATZ. ALLE RECHTE FUER DEN FALL DER PATENT-, GEBRAUCHSMUSTER- ODER GESCHMACKSMUSTEREINTRAGUNG VORBEHALTEN.
THE REPRODUCTION, DISTRIBUTION AND UTILIZATION OF THIS DOCUMENT AS WELL AS THE COMMUNICATION OF ITS CONTENTS TO OTHERS WITHOUT EXPLICID AUTHORIZATION IS PROHIBITED.
OFFENDERS WILL BE HELD LIABLE FOR THE PAYMENT OF DAMAGES. WEIDMUELLER EXCLUSIVELY RESERVES THE RIGHT TO FILE FOR PATENTS, UTILITY MODELS OR DESIGNS.
© WEIDMUELLER INTERFACE GmbH & Co.KG

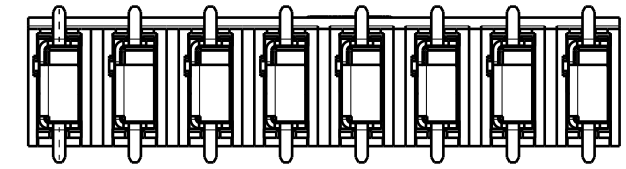

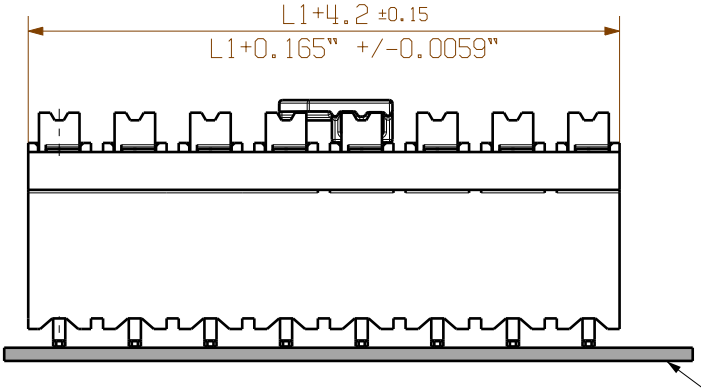

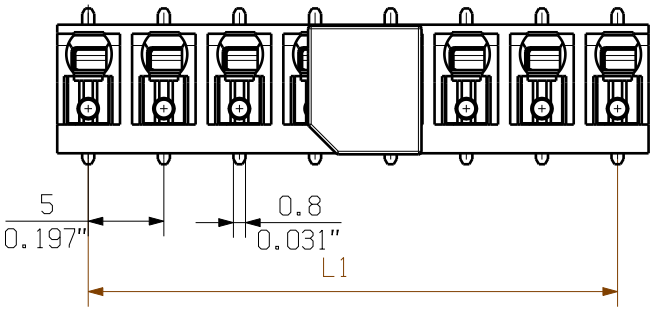

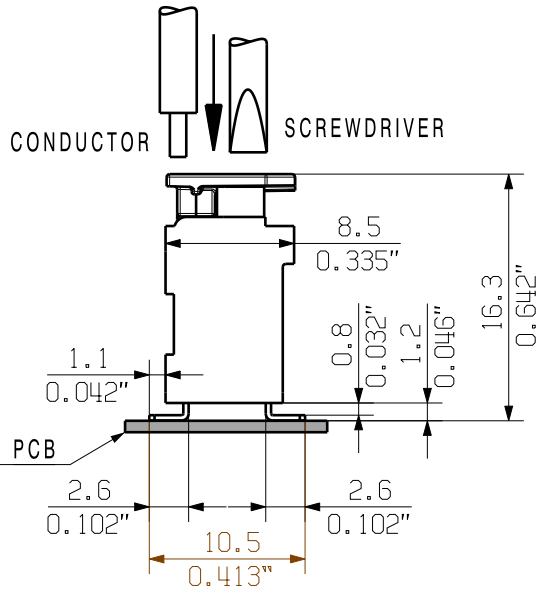

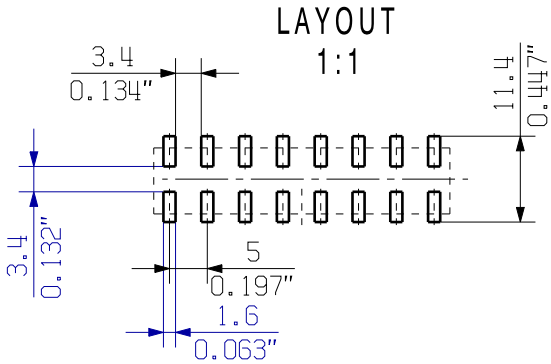

For the mounting on PCBs, it should be noted that the rated data relates only to the PCB components alone.
The neccessary creepage and clearance paths must be observed in the relevnt equipment standards in accordance with IEC 664 / VDE 0110.
The current-carrying capacity and pitch tolerance is to be determined according to DIN IEC 326 part 3.

Weidmüller PCB components are rated in accordance with the DIN EN 61984 standard, and are valid for its field of application. If the components are used in accordance with the intended purpose, the components will meet all requirements with respect to the occuring of electrical, mechanical, thermic and corrosive stress.

SHOWN: LSF-SMD 5.00/08/180...

n	L1 [mm]	L1 [Inch]
8	35,00	1,378
7	30,00	1,181
6	25,00	0,984
5	20,00	0,787
4	15,00	0,591
3	10,00	0,394
2	5,00	0,197

RoHS COMPLIANT

DIN ISO 2768-m

78007/5
09.09.14 HELIS_MA 00
MODIFICATION

CAT.NO.: .

Weidmüller

C 57991 04
DRAWING NO. ISSUE NO.
SHEET 01 OF 02 SHEETS

	DATE	NAME
DRAWN	13.03.2014	HELIS_MA
RESPONSIBLE		KRUG_M
CHECKED	30.09.2014	HELIS_MA
APPROVED		LANG_T

SCALE: 2:1
SUPERSEDES: .

LSF-SMD 5.00/../180...
LEITERPLATTENKLEMME
PCB TERMINAL

PRODUCT FILE: LSF-SMD 7401

Empfohlene Wellen-Lötprofile

Weidmüller Interface GmbH & Co. KG
Klingenbergstraße 16
D-32758 Detmold
Germany
Fon: +49 5231 14-0
Fax: +49 5231 14-292083
www.weidmueller.com

Einzelwelle:

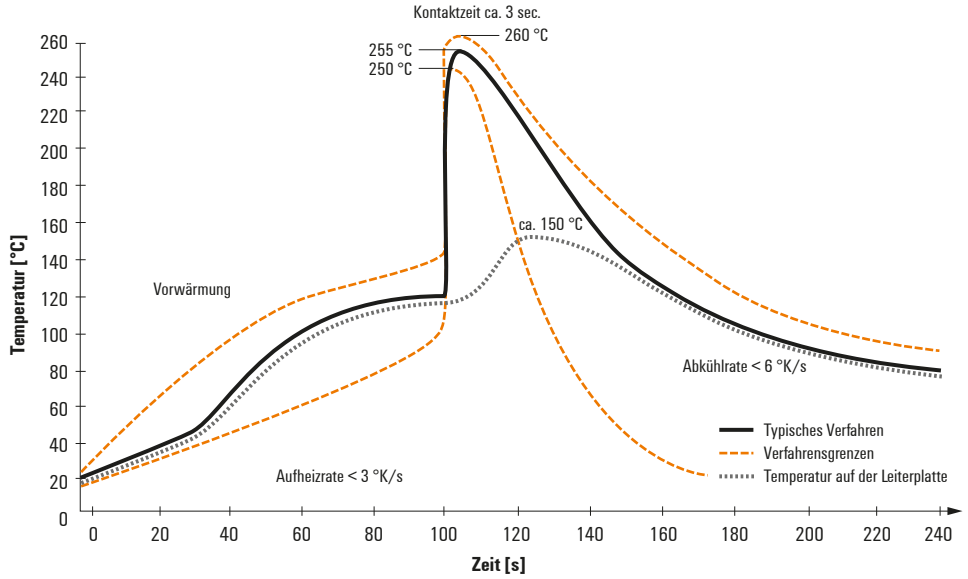

Doppelwelle:

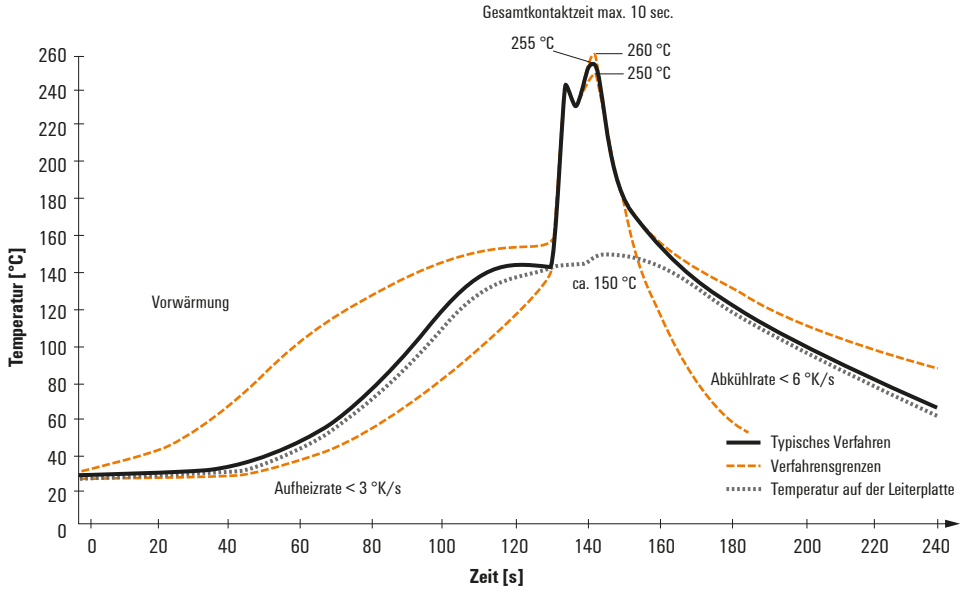

Wellen-Lötprofile

Bedrahtete Anschlusselemente sind in Anlehnung an die Norm DIN EN 61760-1 zu verarbeiten. Anbei zwei Empfehlungen für praxisbezoge Wellenlötprofile, mit denen Leiterplattenanschlussklemmen und Steckverbinder von Weidmüller qualifiziert sind.

Bei der Wahl eines passenden Profils für Ihre Anwendung sind unteranderem folgende Faktoren zu beachten:
- Stärke der Leiterplatte
- Cu-Anteile in den Lagen
- Ein-/Beidseitige Bestückung
- Produktspektrum
- Aufheiz- und Abkühlrate

Die Einzel- und Doppelwelle zeigt jeweils den empfohlenen Verarbeitungsbereich inkl. der maximalen Löttemperatur von 260°C. In der Praxis liegt die maximale Löttemperatur sehr häufig weit unter dem o.g. Maximalprofil.

Reflow Solder Profile

Recommended reflow soldering profile

Weidmüller Interface GmbH & Co. KG
Klingenbergstraße 16
D-32758 Detmold
Germany
Fon: +49 5231 14-0
Fax: +49 5231 14-292083
www.weidmueller.com

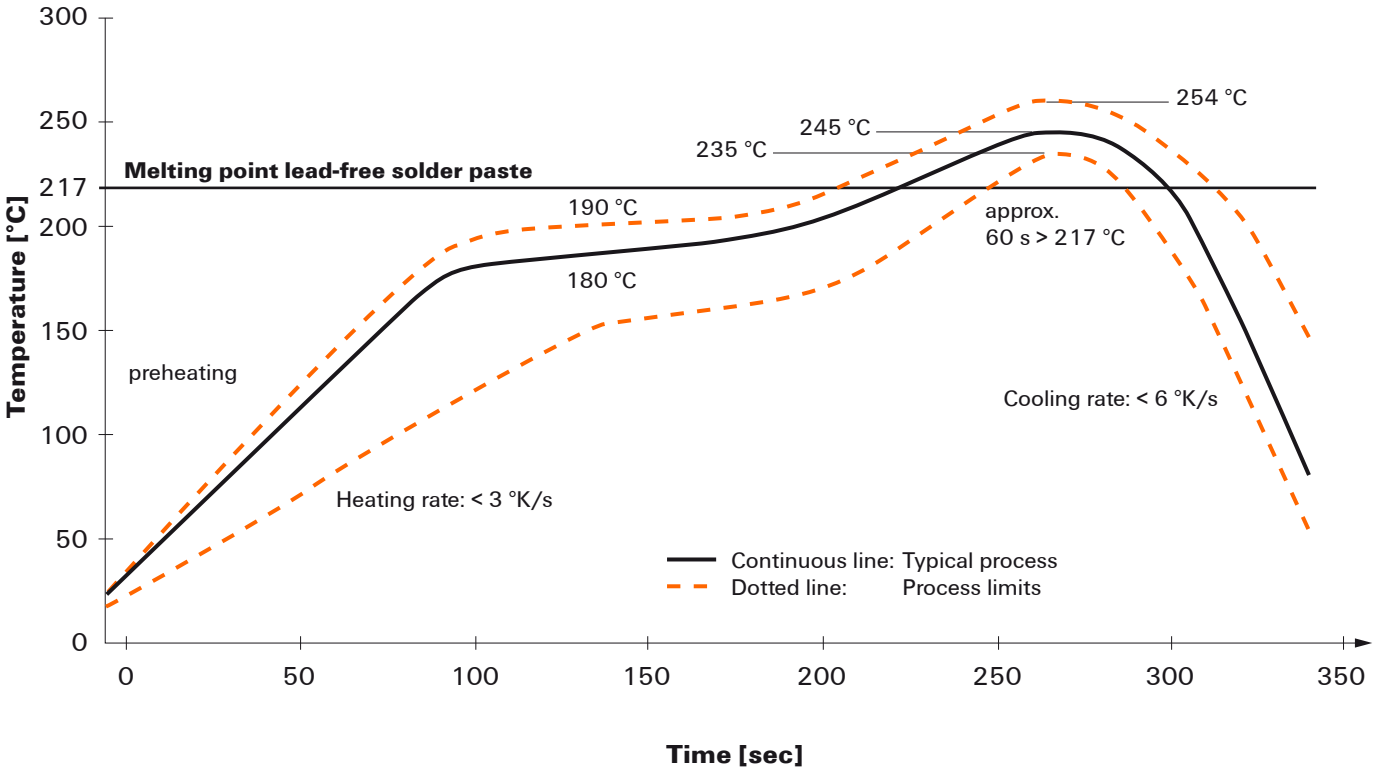

Reflow soldering profile

The perfect soldering profile for SMT Surface Mount Technology is one the most exiting question in SMT production. But there are more than one correct answer: The diagram of temperature-on-time is related to processing features of solder paste and to maximum load of components.

We have to consider the following parameters:
- Time for pre heating
- Maximum temperature
- Time above melting point
- Time for cooling
- Maximum heating rate
- Maximum cooling rate

We recommend a typical solder profile with associated process limits. With preheating components and board are prepared smoothly for the solder phase. Heating rate is typically ≤ +3K/s. In parallel the solder paste is ‚activated'. The time above melting point of 217°C the paste gets liquid and components and boards begin to connect. The maximum temperature of 245°C to 254°C should stay between 10 and 40 seconds. In the cooling phase at ≥ -6K/s solder is cured. Board and components cool down while avoiding cold cracks.

We reserve the right to make technical changes.