DATASHEET - SK-SW



Molded float

Part no.	**SK-SW**
Catalog No.	**012651**
Alternate Catalog No.	**SK-SW**
EL-Nummer (Norway)	**4356151**

Delivery program

Product range			Accessories
Basic function			molded float
			Can be filled with sand or liquid

Design verification as per IEC/EN 61439

Technical data for design verification			
Operating ambient temperature min.		°C	-25
Operating ambient temperature max.		°C	70

Technical data ETIM 7.0

Low-voltage industrial components (EG000017) / Accessories for control circuit devices (EC002024)			
Type of electrical accessory			Other
Type of mechanical accessory			Other

Dimensions

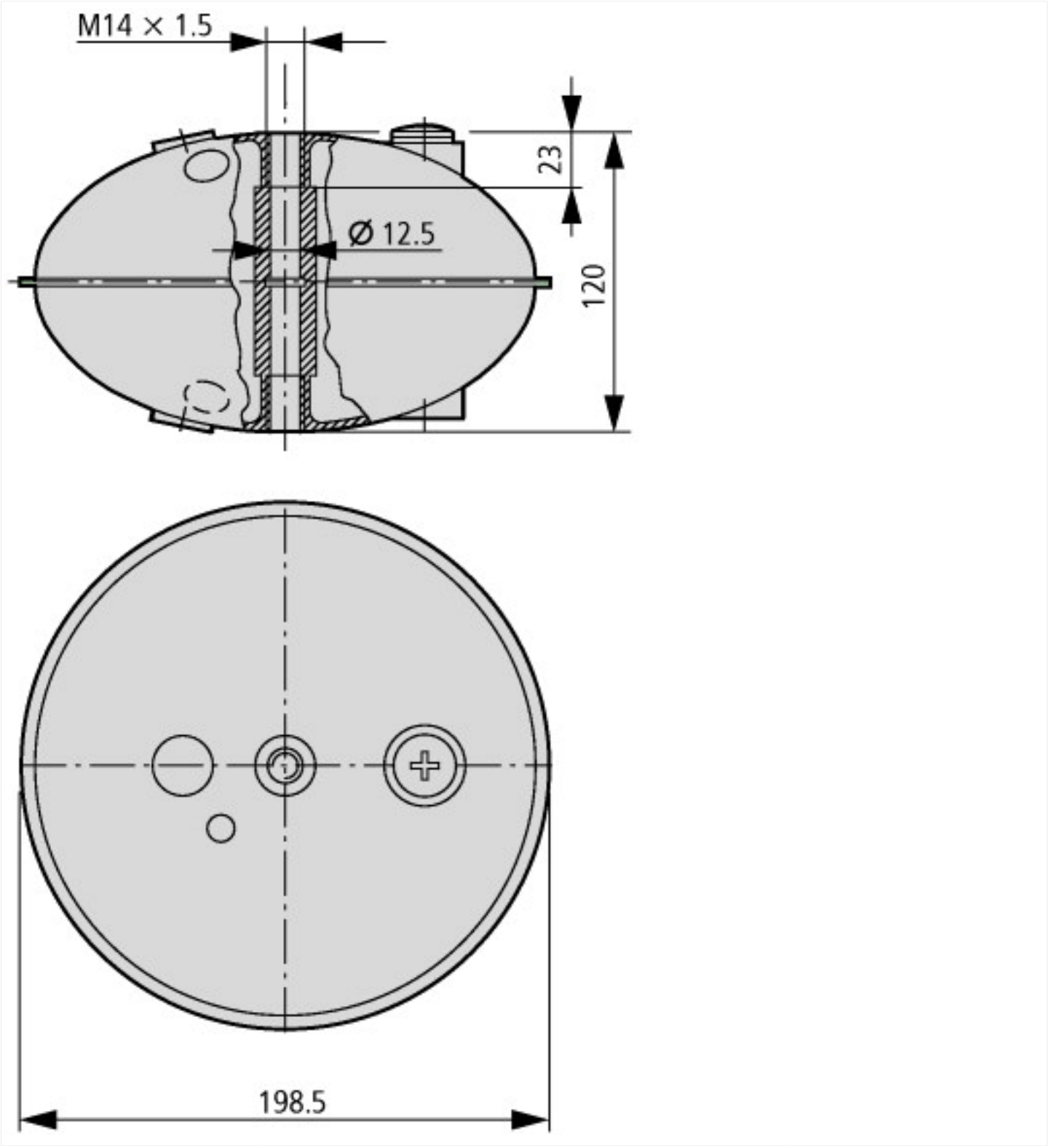

© 06/2021 by Eaton Industries GmbH