Radio control model / Flugmodel

BEECHCRAFT

BONANZA

VQ No: VQA136V

ALL BALSA, PLYWOOD CONSTRUCTION AND ALMOST READY TO FLY

Instruction manual / Montageanleitung

SPECIFICATIONS

Wingspan:.....1580mm (62.2in)
Length:.....1190mm (46.8 in)
Electric Motor:.....See next pager
Glow Engine:..... .46 2-T / .70 4-T
RTF Weight: 3.2Kg / 7.05lbs (Will vary with Equipment Used).
Radio:.....6 Channel / 7-8 Servos
Function: Ailerons-Elevator-Rudder-Throttle Flaps-Optional Retractable Landing Gear.

TECHNISCHE DATEN

Spannweite:.....1580mm
Länge:.....1190mm
Elektroantrieb.....(siehe nächste Seite)
Verbrennerantrieb:.....7.45cc - 11.5cc
Fluggewicht:.....3.2Kg
Fernsteuerung.....6 Kanal / 7-8 Servos

WARNING! This radio controlled model is NOT a toy. If modified or flown carelessly it could go out of controll and cause serious human injury or property damage. Before flying your airplane, ensure the air field is spacious enough. Always fly it outdoors in safe areas and seek professional advice if you are unexperienced.

ACHTUNG! Dieses ferngesteuerte Modell ist KEIN Spielzeug! Es ist für fortgeschrittene Modellflugpiloten bestimmt, die ausreichende Erfahrung im Umgang mit derartigen Modellen besitzen. Bei unsachgemässer Verwendung kann hoher Personen- und/oder Sachschaden entstehen. Fragen Sie in einem Modellbauverein in Ihrer Nähe um professionelle Unterstätzung, wenn Sie Hilfe im Bau und Betrieb benötigen. Der Zusammenbau dieses Modells ist durch die vielen Abbildungen selbsterklärend und ist für fortgeschrittene, erfahrene Modellbauer bestimmt.

REQUIRED FOR OPERATION (Purchase separately) More info: www.pichler-modellbau.de

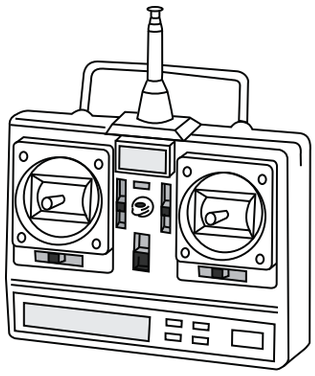

10.5x6 for .40 - 2 cycle engine
11x6 for .46 - 2 cycle engine
12x6 for .60 - 4 cycle engine
12x7 for .70 - 4 cycle engine
13x7 for electric motor

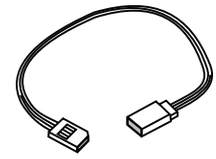

Extension for aileron servo, retract servo and Rx battery pack.

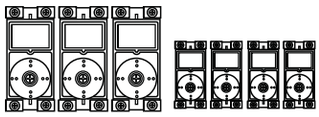

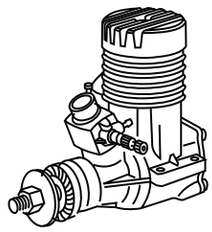

.46 ~ .50 - 2 cycle

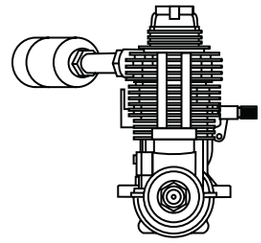

.60 ~.70 - 4 cycle

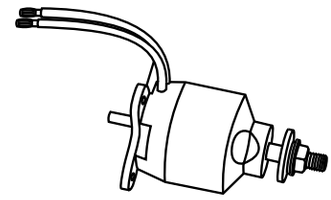

Minimum 6 channel radio
for airplane with 5 (4 for EP) standard servos
and two servo mini.

.Motor control x1(for GP) .Elevator x1
.Nose gear x1. Aileron x2mini servo. Flapx2 mini servo

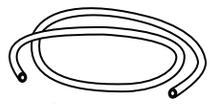

Silicone tube

Antrieb Tuning (Kraftvoller Kunstflug):
BOOST 60 Brushless Combo Set, Best.Nr. C3174
LiPO Akku RED POWER 4250-5S, Best.Nr. C4547
Luftschraube 13*8, Best.Nr. C2846

GLUE (Purchase separately)

Silicon sealer

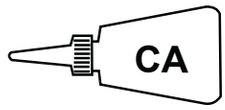

Cyanoacrylate Glue

Epoxy Glue (5 minute type)

Epoxy Glue (30 minute type)

TOLLS REQUIRED (Purchase separately)

Hobby knife

Needle nose Pliers

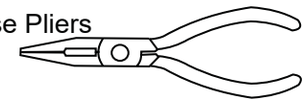

Sander

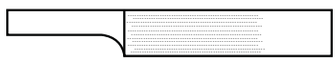

Phillip screw driver

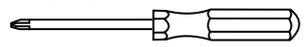

Scissors

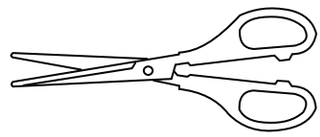

Hex Wrench

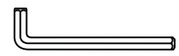

Awl

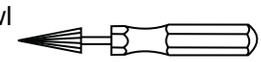

Wire Cutters

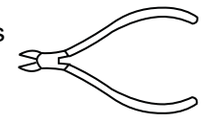

Masking tape - Straight Edged Ruler - Pen or pencil - Drill and Assorted Drill Bits

If exposed to direct sunlight and/or heat, wrinkels can appear. Storing the model in a cool place will let the wrinkles disappear. Otherwise, remove wrinkles in covering film with a hair dryer, starting with low temperature. You can fix the corners by using a hot iron.

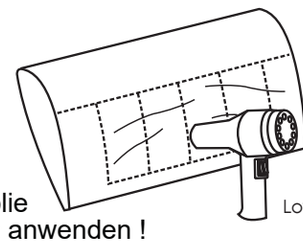

Bei Sonneneinstrahlung und/oder Wärme kann die Folie erschlaffen bzw. Falten entstehen. Verwenden Sie ein Warumluftgebläse (Haartrockner) um evtl. Falten aus der Folie zu bekommen. Die Kanten können Sie mit einem Bügeleisen behandeln. Nicht zuviel Hitze anwenden !

Symbols used throughout this instruction manual, comprise:

- 1.5mm — Drill holes using the stated size of drill (in this case 1.5 mm ÿ)
- ! — Take particular care here
- Hatched-in areas: remove covering film carefully
- Check during assembly that these parts move freely, without binding
- A B — Use epoxy glue
- CA — Apply cyano glue
- L/R — Assemble left and right sides the same way.
- X — Not included. These parts must be purchased separately

- 1.5mm — Löcher bohren mit dem angegebenen Bohrer (hier 1,5 mm)
- ! — Hier besonders aufpassen
- Schraffierte Stellen, Bespannfolie vorsichtig entfernen
- Während des Zusammenbaus immer prüfen, ob sich die Teile auch reibungslos bewegen lassen
- A B — Epoxy-Klebstoff verwenden
- CA — Sekundenkleber auftragen
- L/R — Linke und rechte Seite wird gleichermaßen zusammengebaut
- X — Nicht enthalten. Teile müssen separat gekauft werden.

Read through the manual before you begin, so you will have an overall idea of what to do.

CONVERSION TABLE

1.0mm = 3/64”	3.0mm = 1/8”	10mm = 13/32”	25mm = 1”
1.5mm = 1/16”	4.0mm = 5/32”	12mm = 15/32”	30mm = 1-3/16”
2.0mm = 5/64”	5.0mm = 13/64”	15mm = 19/32”	45mm = 1-51/64”
2.5mm = 3/32”	6.0mm = 15/64”	20mm = 51/64”	

1-Aileron and Flap servo

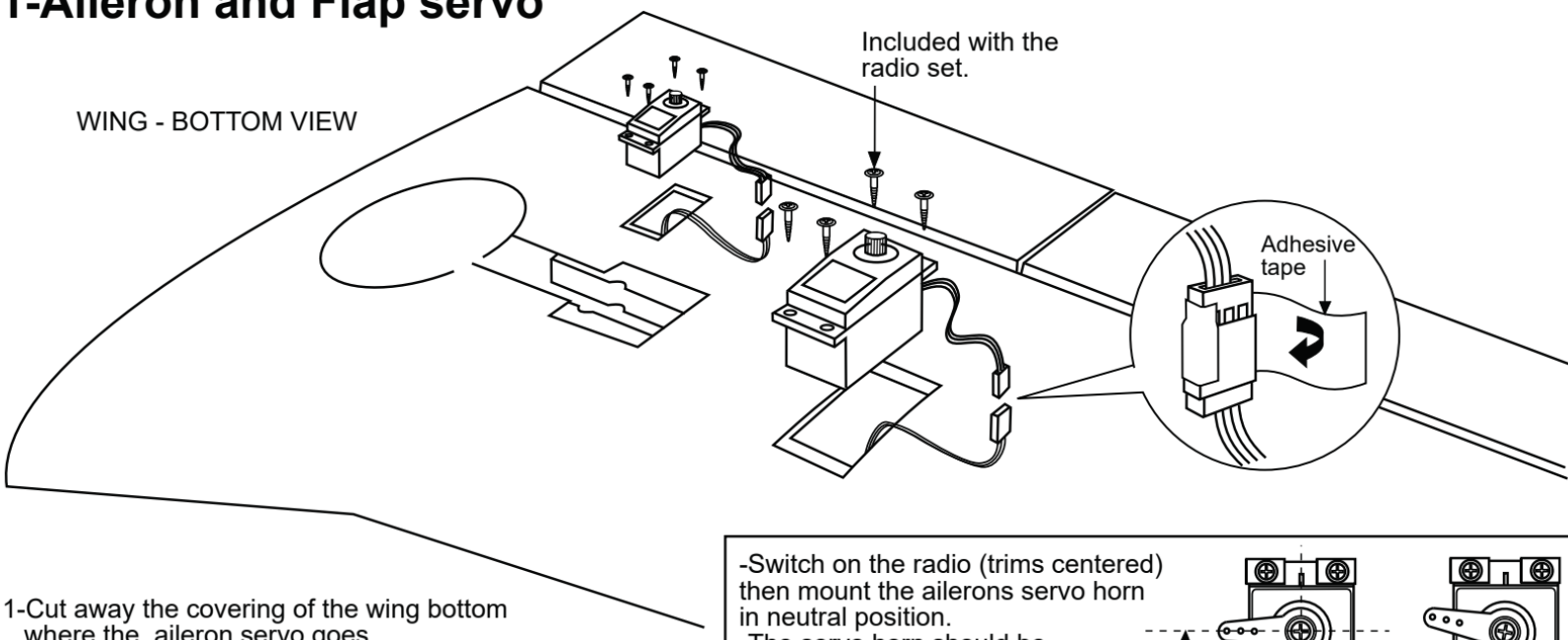

1-Cut away the covering of the wing bottom where the aileron servo goes.
2-Connect the aileron servo cord to the aileron extension cord.
3-Install the aileron servo on the servo mount.

Do the same way with second wing half.

-Switch on the radio (trims centered) then mount the ailerons servo horn in neutral position.
-The servo horn should be perpendicular to the servo

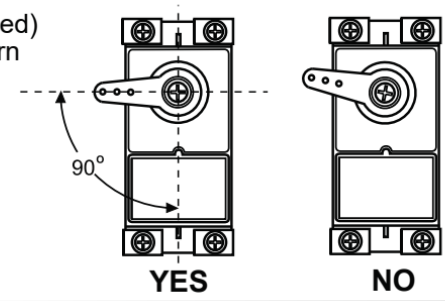

2-Aileron/Flap control horn

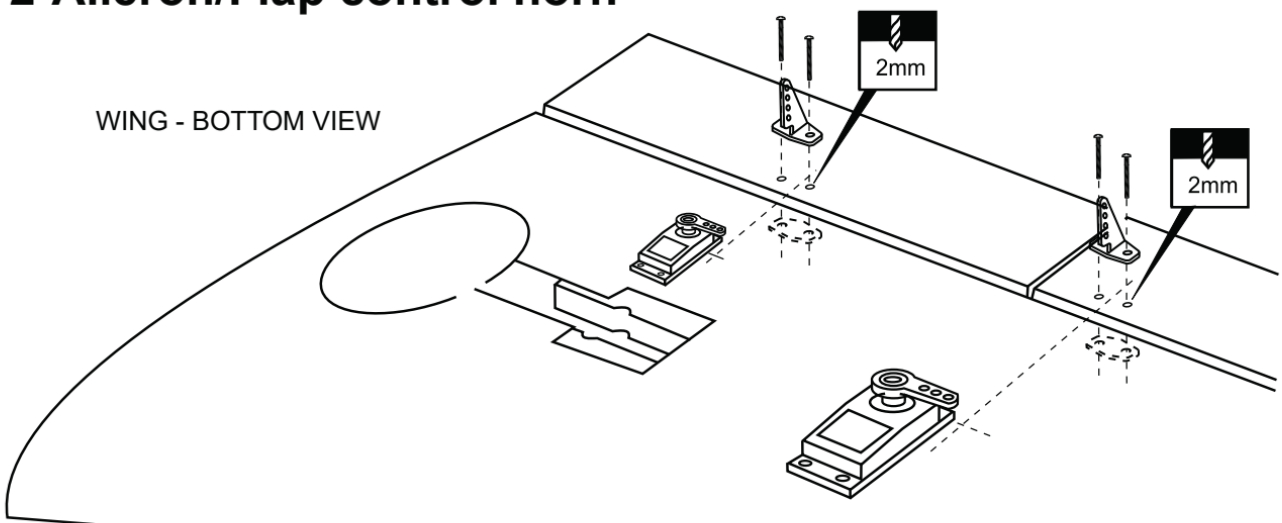

Plastic control horn

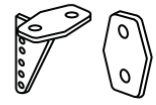

.....4

2x30mm....8

.....4

Control horn Alignment

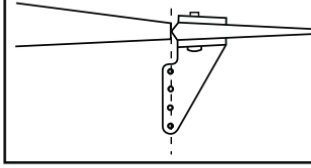

1-Depending on the position of the linkage, determine the location of aileron control horn. The horn holes must be perfectly aligned with the axis of articulation.
2-Mark the position of the “foot” of the horn on the aileron. Then, with the drill, make the 2 holes.
3-Install the aileron control horn as shown.

Do the same way with second wing half.

3-Aileron/Flap linkages

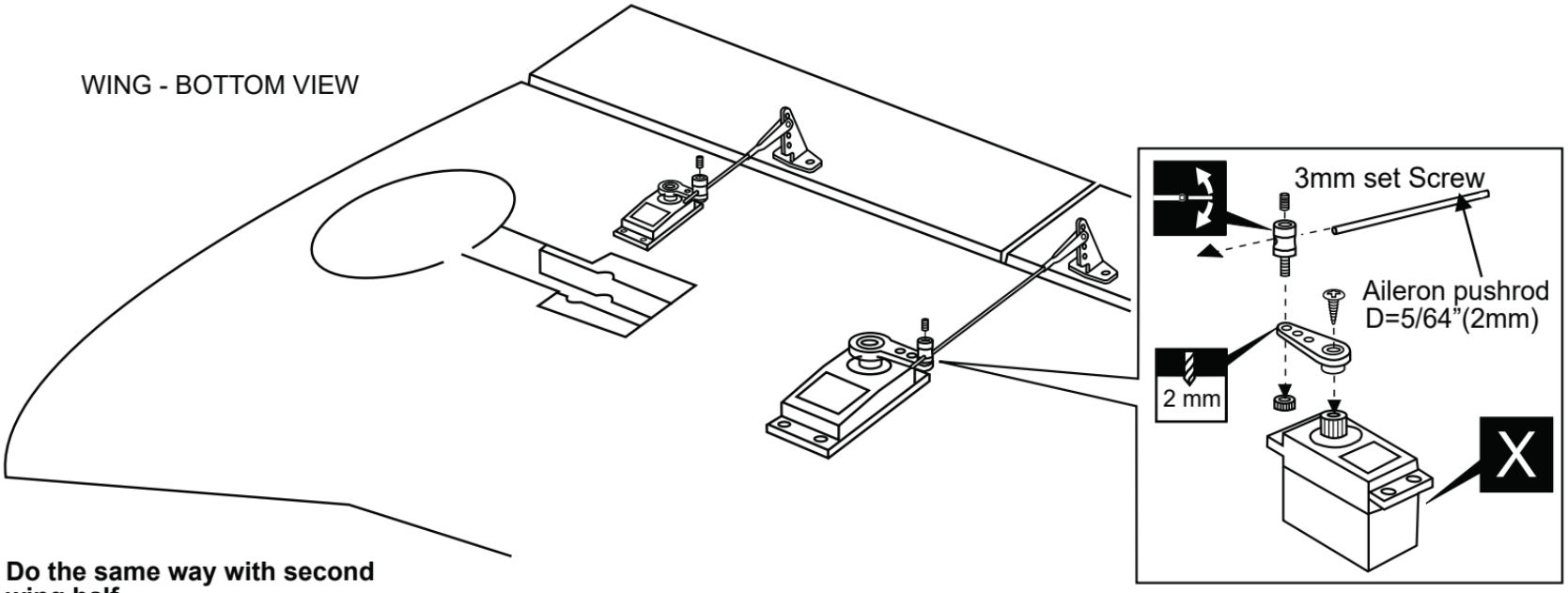

Do the same way with second wing half.

4-Electric retract

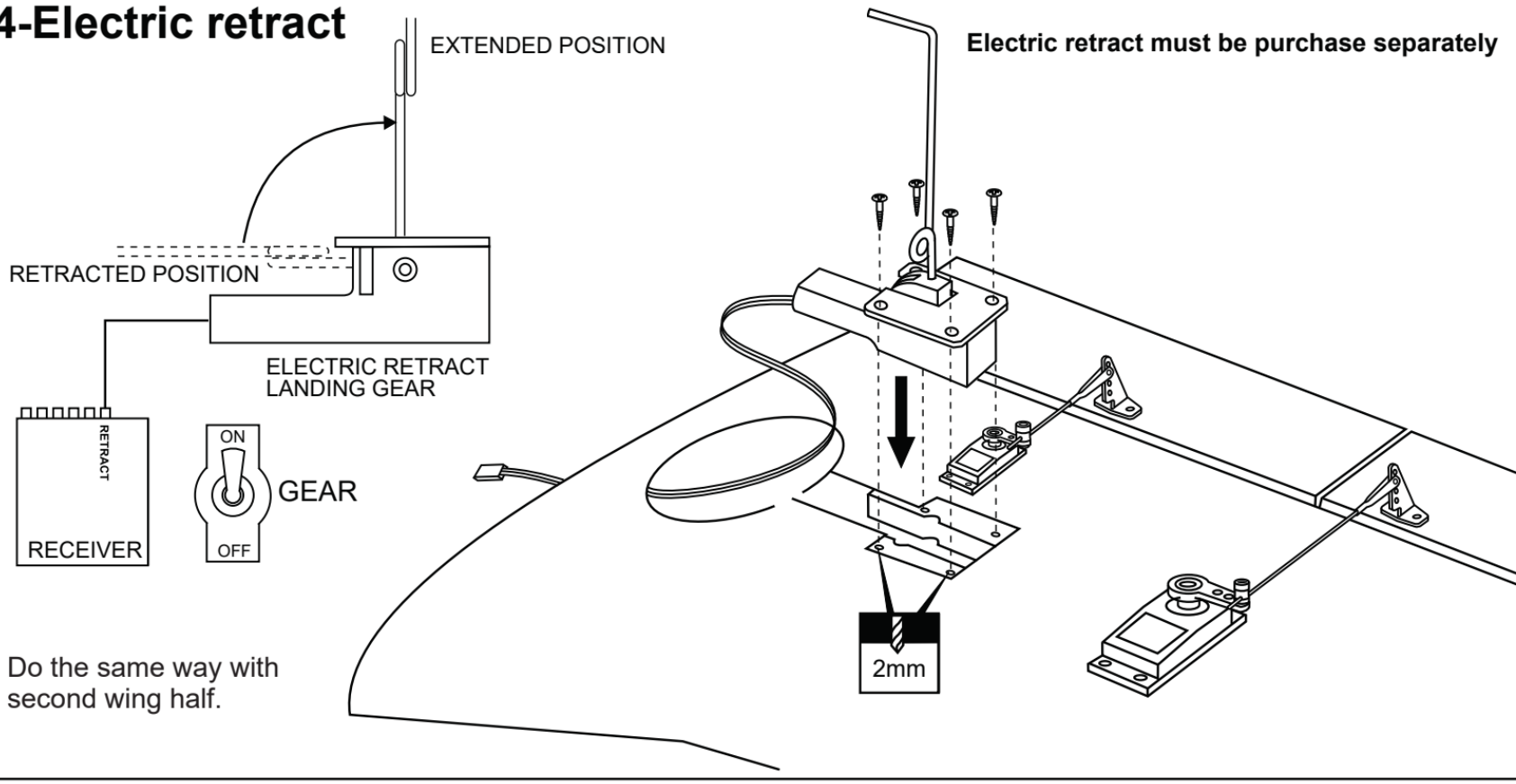

Electric retract must be purchase separately

Do the same way with second wing half.

5-Fixed gear

Main landing gear

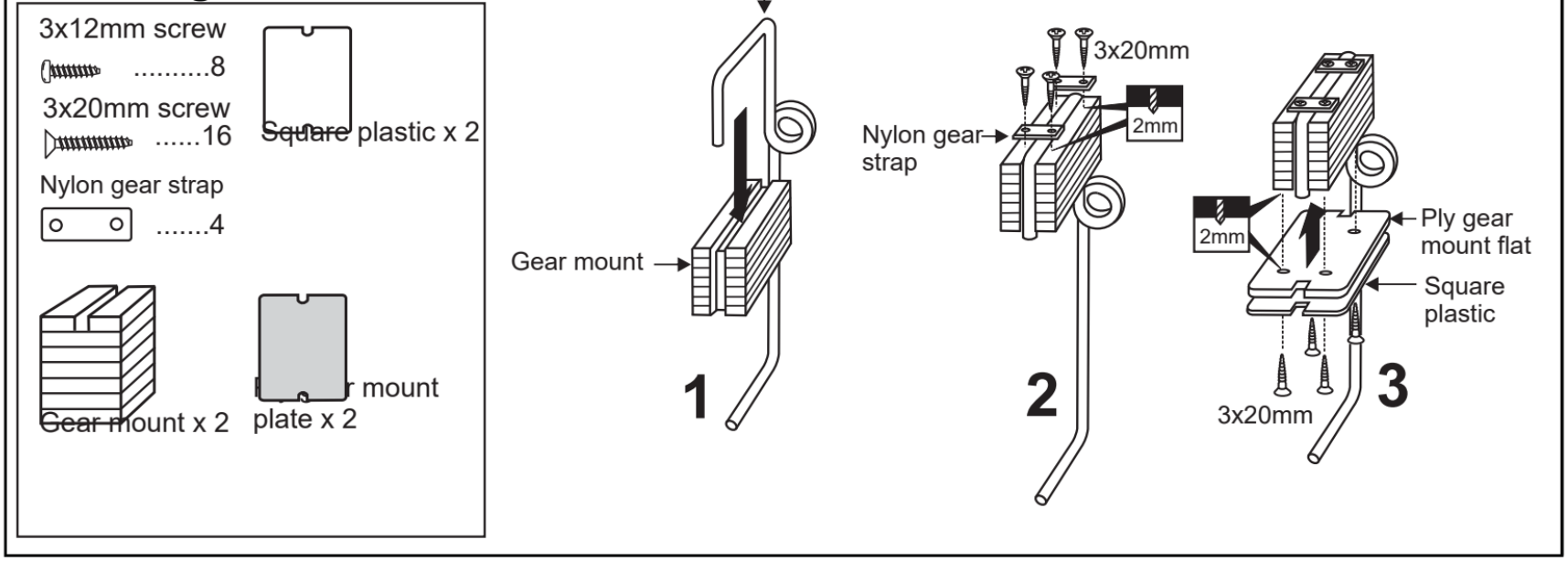

6-Fixed gear installation

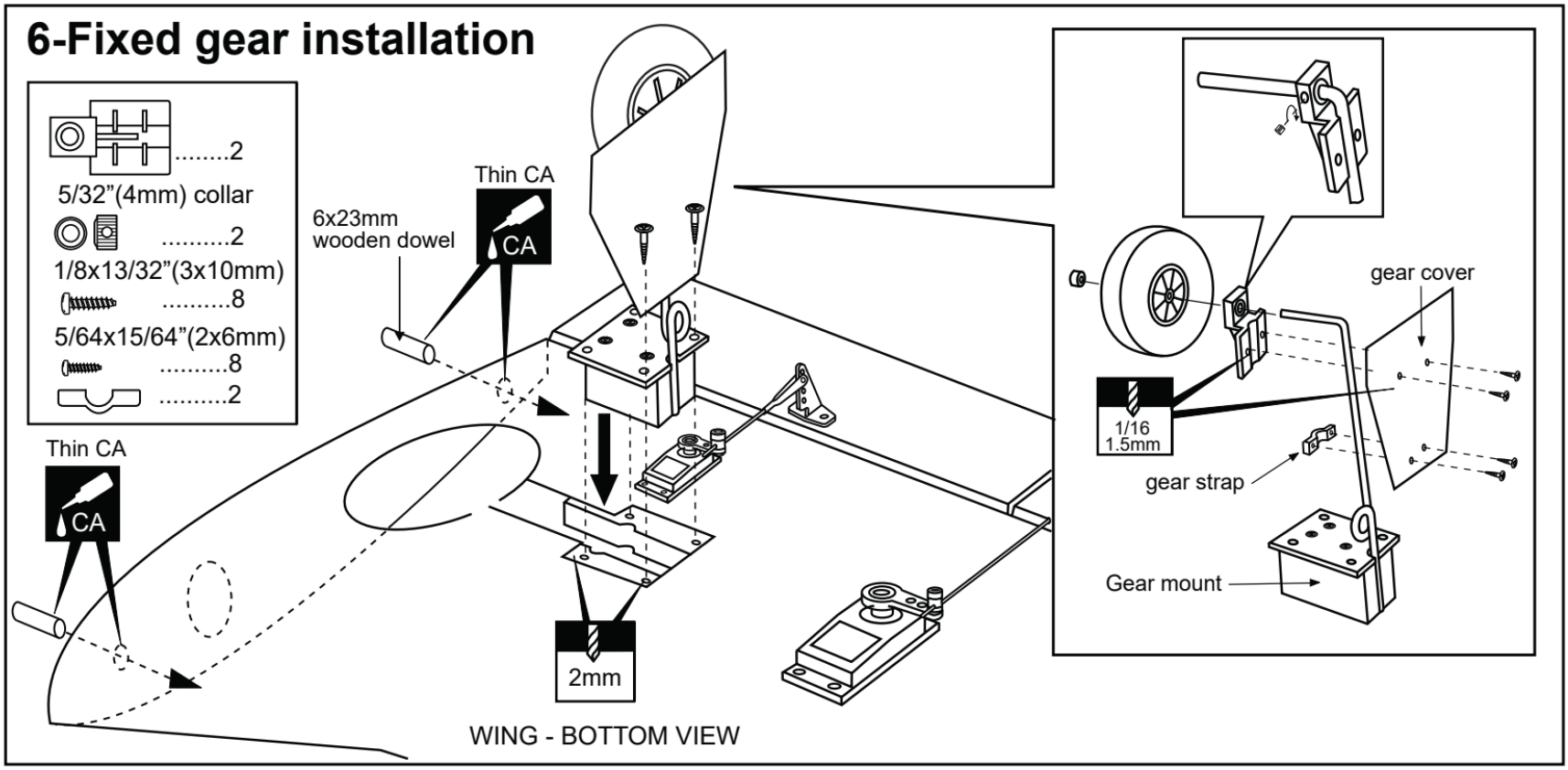

7- Stabilizer installation

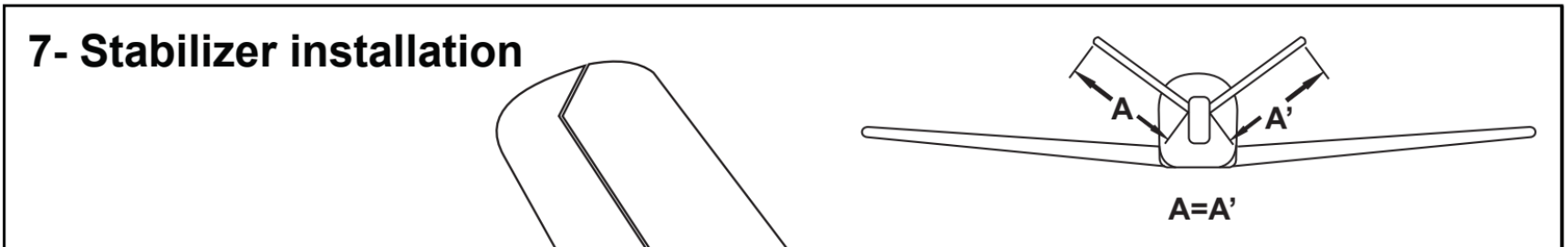

Trial fit the horizontal stabilizer in place .

Cut away only the covering.

Check the alignment of the stabilizer. When you are satisfied with the alignment , use a pencil to trace around the top and bottom of the stabilizer where it meets the fuselage.

Remove the horizontal stabilizer from the vertical stabilizer. Using a straight edge and a sharp hobby knife, carefully cut away the covering **inside the lines** which were marked above. Be cautious **not to cut into the wood**-this will weaken the structure**.**

Cut away only the covering both sides.

Again, slide the stabilizer into the slot on the fuselage. Check the alignment of the stabilizer. When you are satisfied with the alignment, glue (30 min. Epoxy) the both sides of the stabilizer where it meets the fuselage.

! Securely glue together. If coming off during fly, you lose control of your air plane.

30 min. Epoxy

A B

Control horn Alignment

Plastic control horn

.....4

2x20mm....4

8-Nose gear

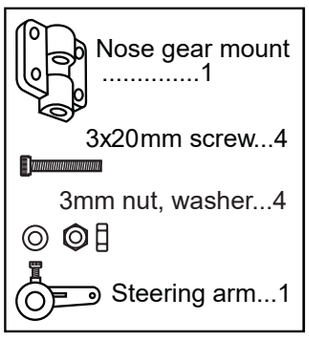

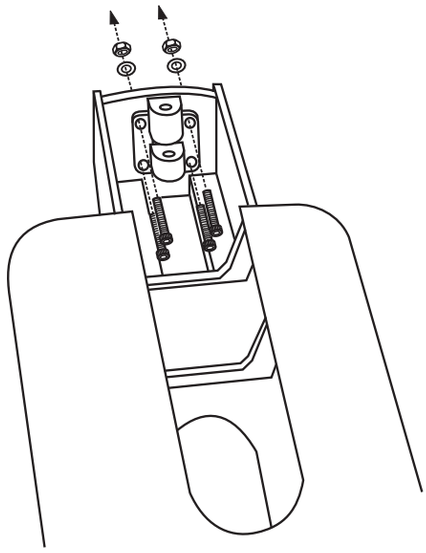

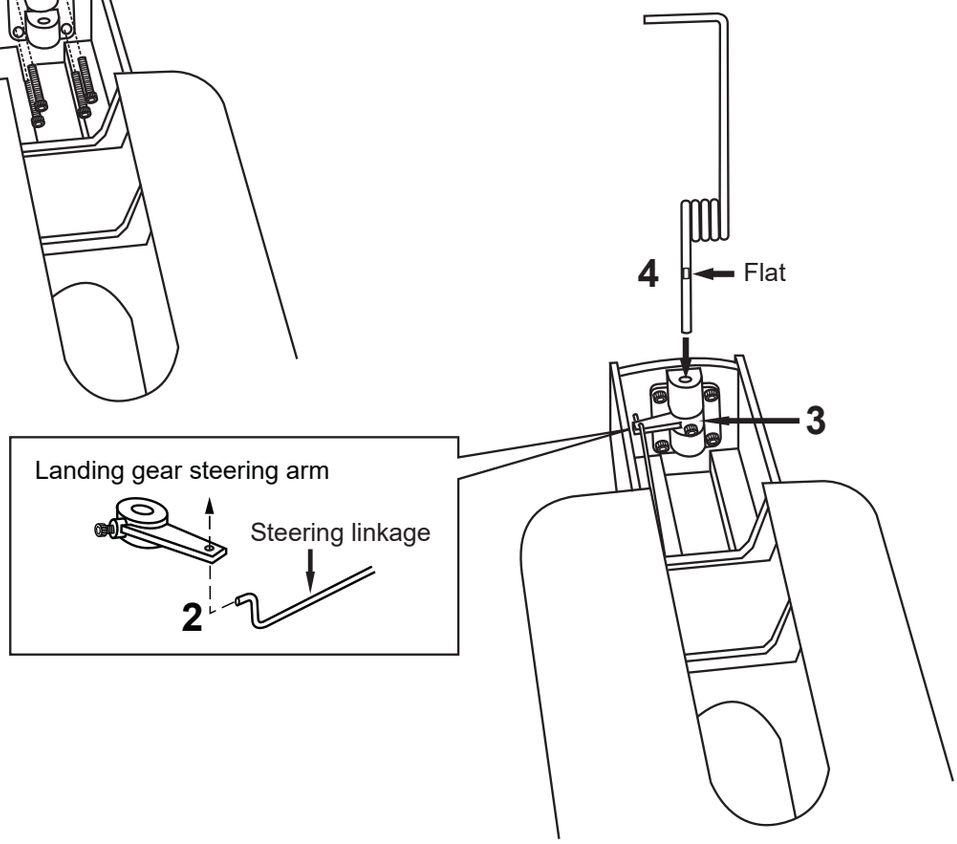

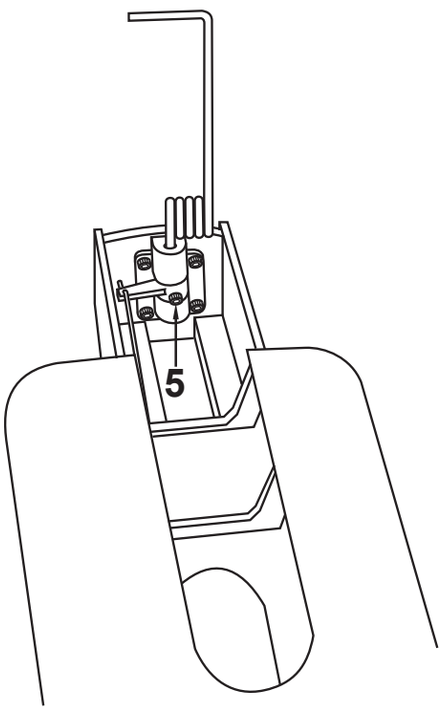

1- Route the steering linkage into the fuselage and through the fire-wall.

2- Insert “Z” bend of steering linkage inside the hole of front landing gear Steering arm.

3- Position the steering arm inside the front landing gear mount already Attached to the firewall.

4- Slide in the front gear leg with the flat to back through the bearing and steering arm.

5- Screw steering arm on the leg.

IN CASE OF ELECTRIC RETRACT LANDING GEAR USING

(Electric retract landing gear and Struts must purchase separately)

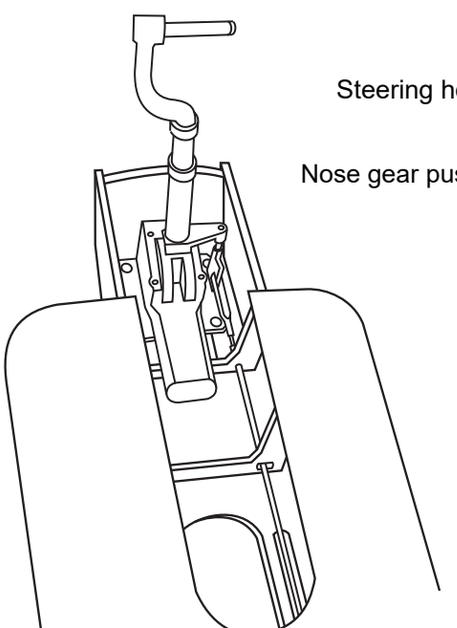

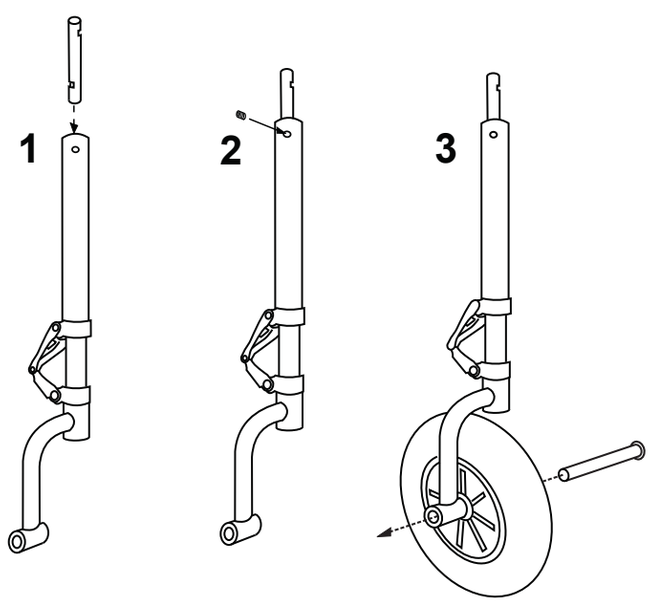

9-Engine mount / Engine

5/32x1”	1/8x5-1/64”
4x25mm screw	3x20mm screw
...4	...4
Blind-nut	1/8”(3mm) nut
.....4	4

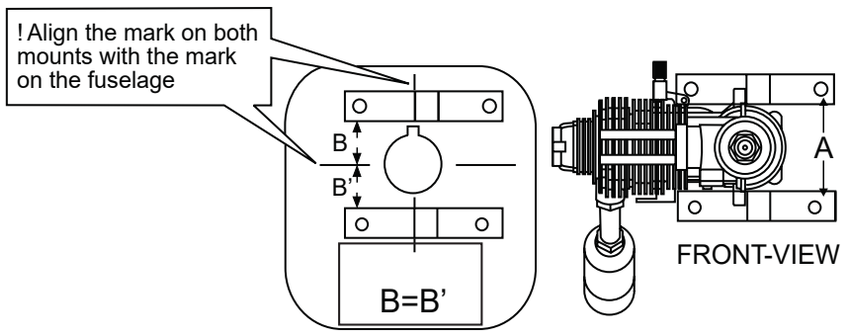

Using a pencil or felt tipped pen, mark the fire wall where the four holes are to be drilled.

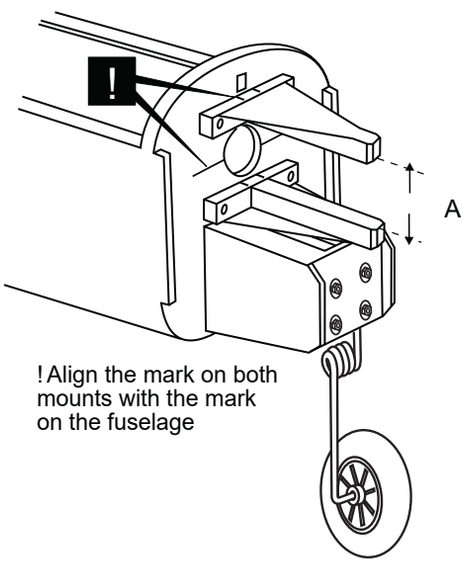

Remove the engine mount and drill a 13/64”(5mm) hole through the fire-wall at each of the four marks marked.

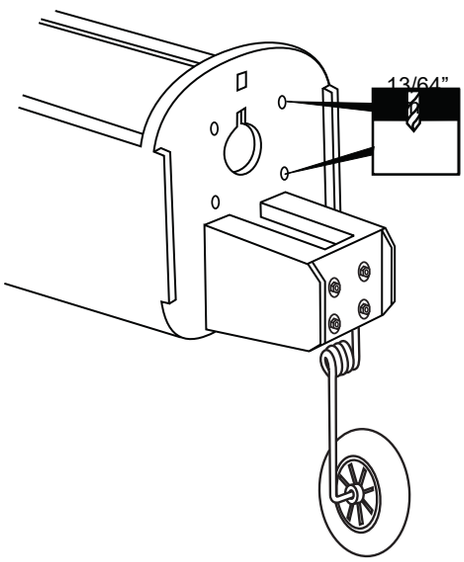

Reposition the engine mounts on to the fire-wall. Attach the four blind-nut to the fire-wall as show. Secure them with four 4x25mm screw.

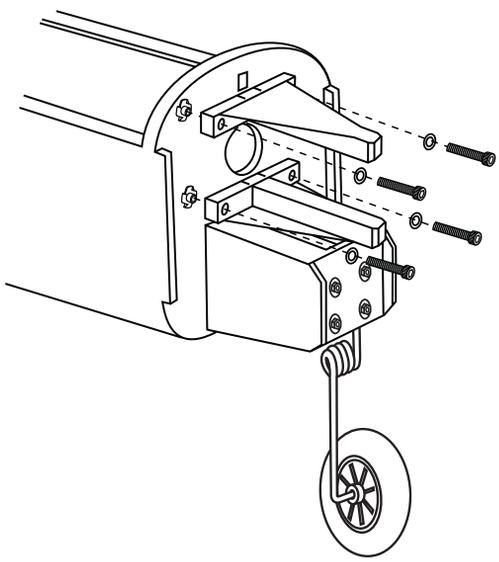

Position the engine on to the engine mounts so the distance from the prop hub to the fire-wall from124 to 130mm.
Mark the engine mounting plate where the four holes are to be drilled.

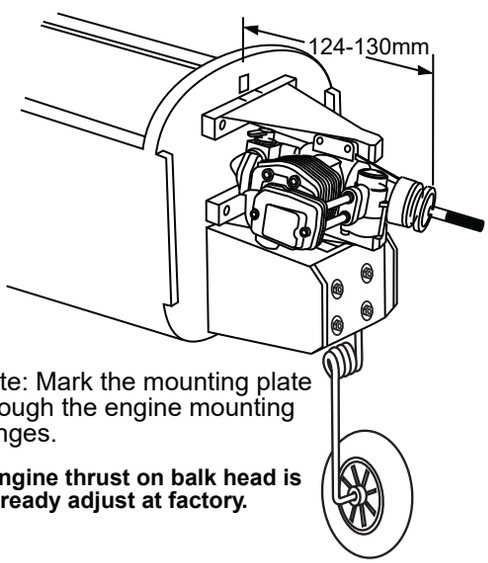

Note: Mark the mounting plate through the engine mounting flanges.

! Engine thrust on balk head is already adjust at factory.

Remove the engine and drill a 1/8”(3mm) holes through the beam at each of the four marks made above.

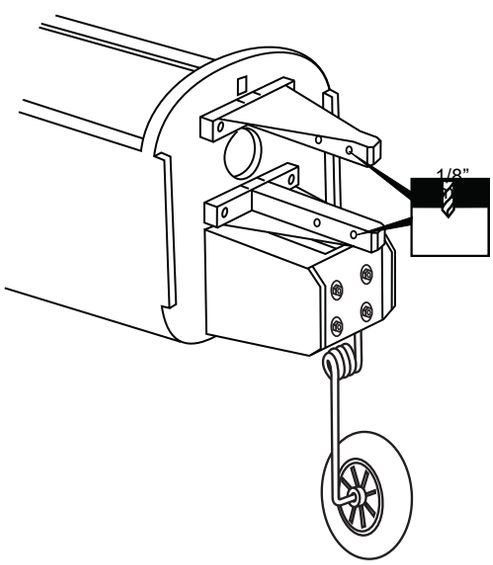

Reposition the engine on the engine mount beams, aligning it with the holes. Secure the engine to the engine mount using four 3x25mm screws.

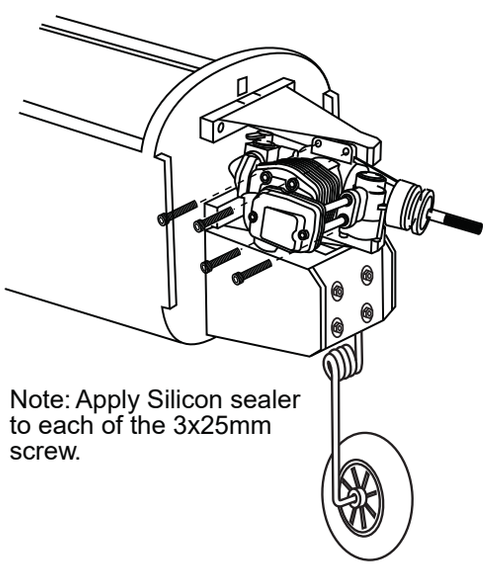

Note: Apply Silicon sealer to each of the 3x25mm screw.

10-Fuel tank (in case of glow engine using)

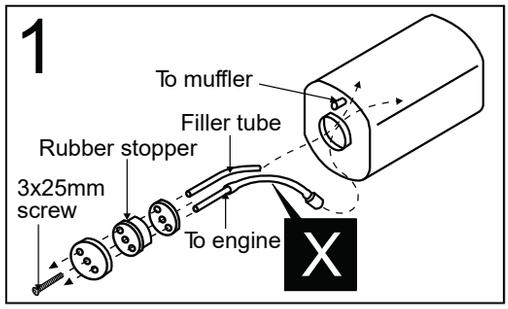

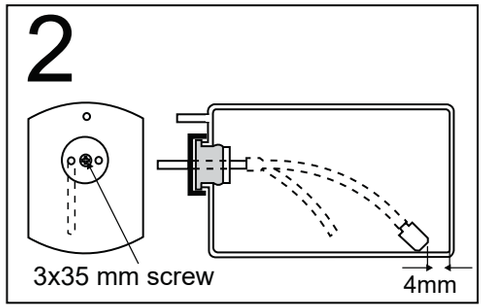

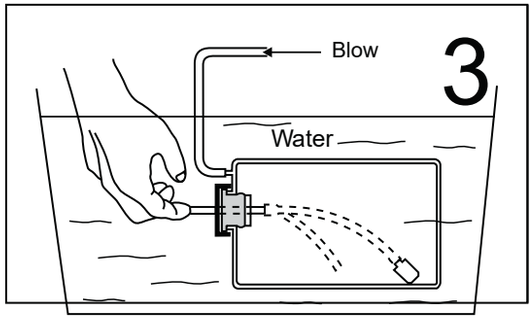

After confirming the direction . Insert this assembly, clunk end first, into the fuel tank and tighten and screw the fuel tank cap on firmly.

Ensure that the fuel tank clunk does not touch the rear of the fuel tank.

Checking for leaks - block the vents and blow into the feed - if in doubt submersing the tank in a blow of water will show up any problems.

11-Electric Motor

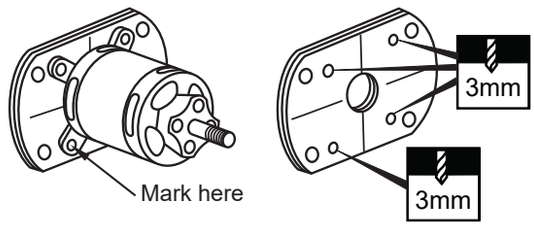

Using a aluminum motor mounting plate as a template, mark the plywood motor mounting plate where the four holes are to be drilled .

Remove the motor and drill a 3mm (1/8”) hole at each of the four marks marked.

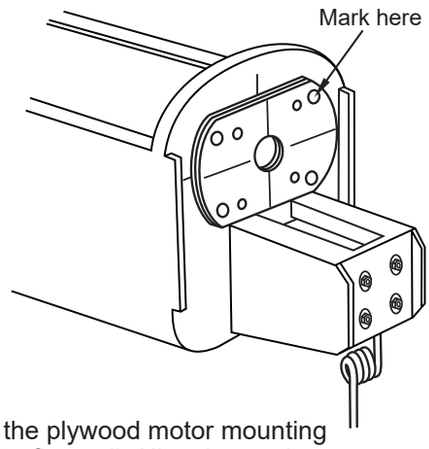

Apply the plywood motor mounting onto the fire-wall. Align the marks on the motor mounting with the marks on the fire-wall. Mark the fire-wall where the four holes are to be drilled.

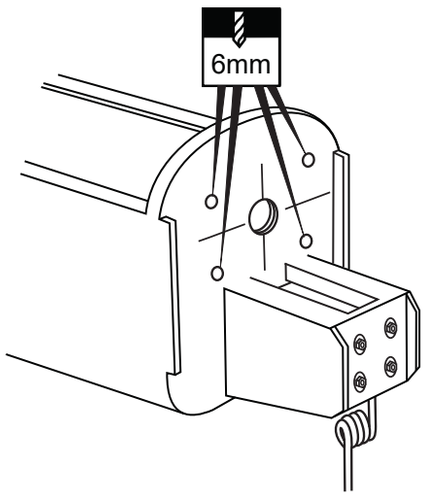

Remove the motor mounting and drill a 5mm hole at each of the four marks marked.

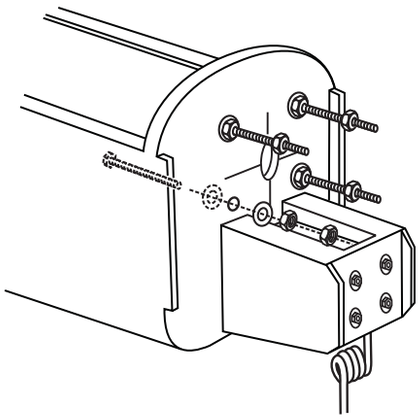

Attach the four 6x100mm bolts, washers and nuts to the fire-wall as shown.

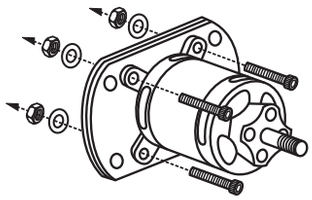

Attach the motor to the motor mounting and secure it in place using the four 3x20mm bolts and nuts.

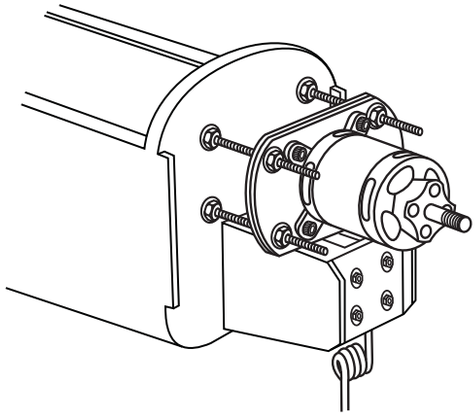

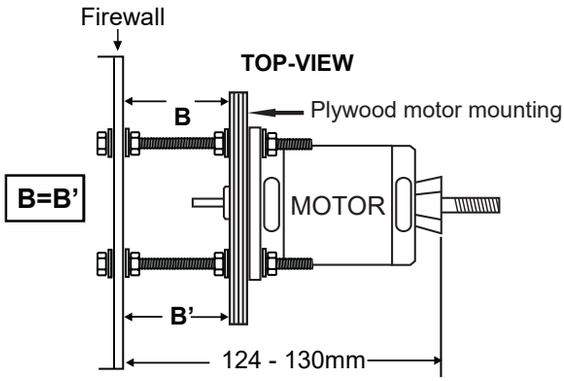

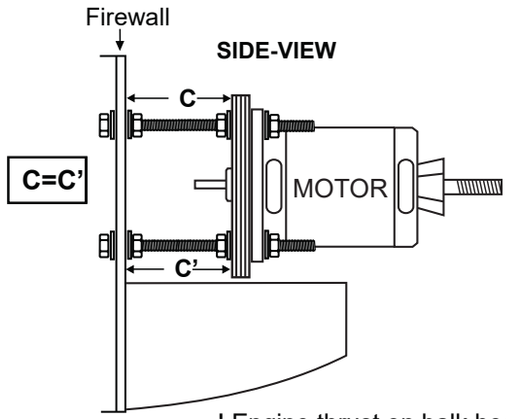

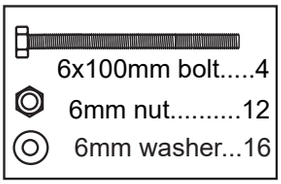

! Engine thrust on balk head is already adjust at factory

12-Cowling

2.5x10mm screw 3

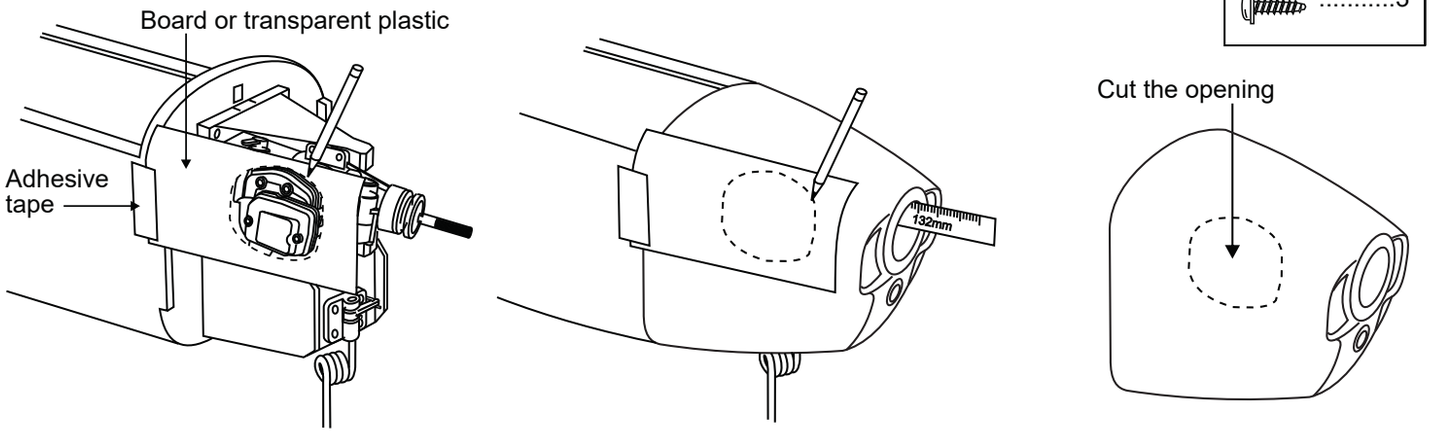

1-Attach the board or transparent plastic on the side of the fuselage with the adhesive tape as show.
2-Using a pencil or felt tipped pen trace around the engine head where it meet the cowl. Cut the opening the board or transparent plastic for the engine head as marked before.
3-Remove the engine and insert the cowl on to the fuselage so the distance from the fire wall to the front of the cowl from124 to 130mm. Trace around inside the hole on the board or transparent plastic with a pencil.
4-Remove the cowl from the fuselage and carefully cut the opening for the engine head as marked above. Do the same way with the hole for needle-valve.
5-Again. Insert the cowl on to the fuselage and secure it in place with five 2.5x10mm self tapping screws.

13- Servo

FUSELAGE - TOP VIEW

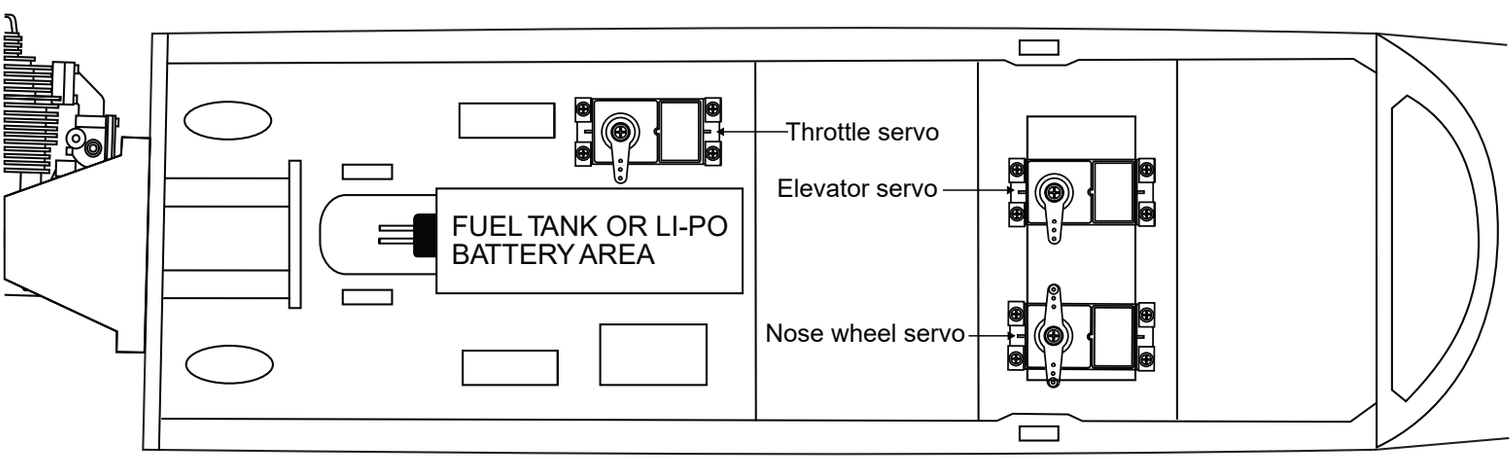

Shift the location of the fuel tank, battery pack, or Li-po battery as needed to obtain the specified CG.

14-Linkages

FUSELAGE - TOP VIEW

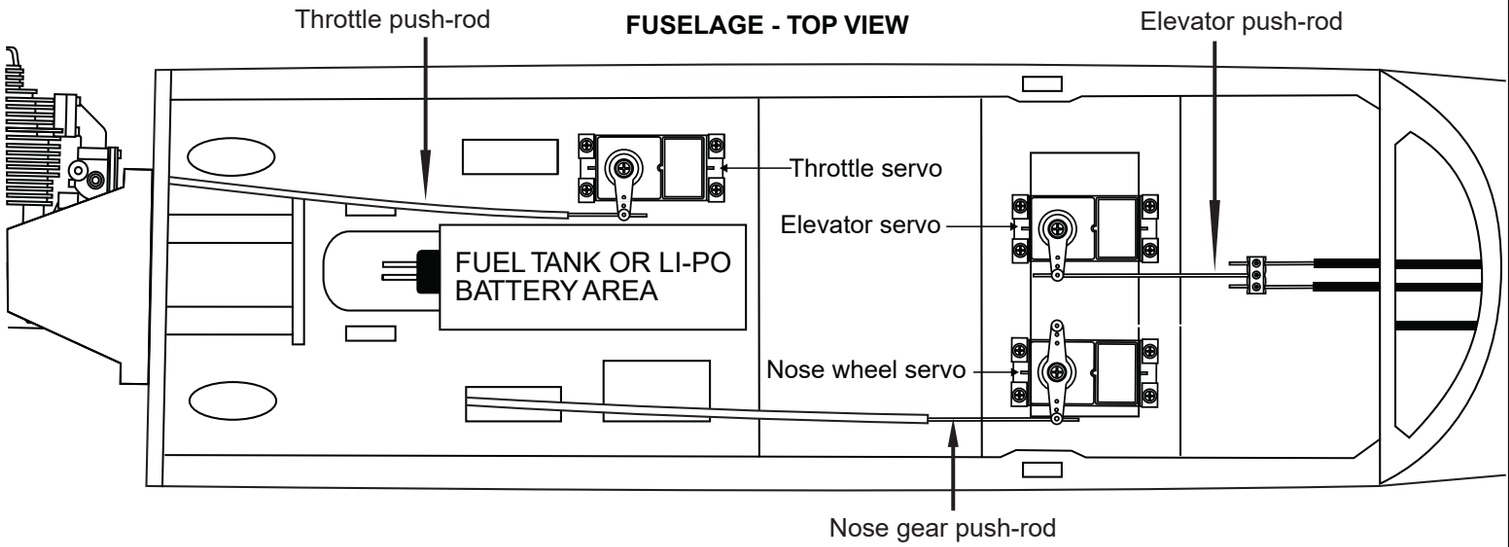

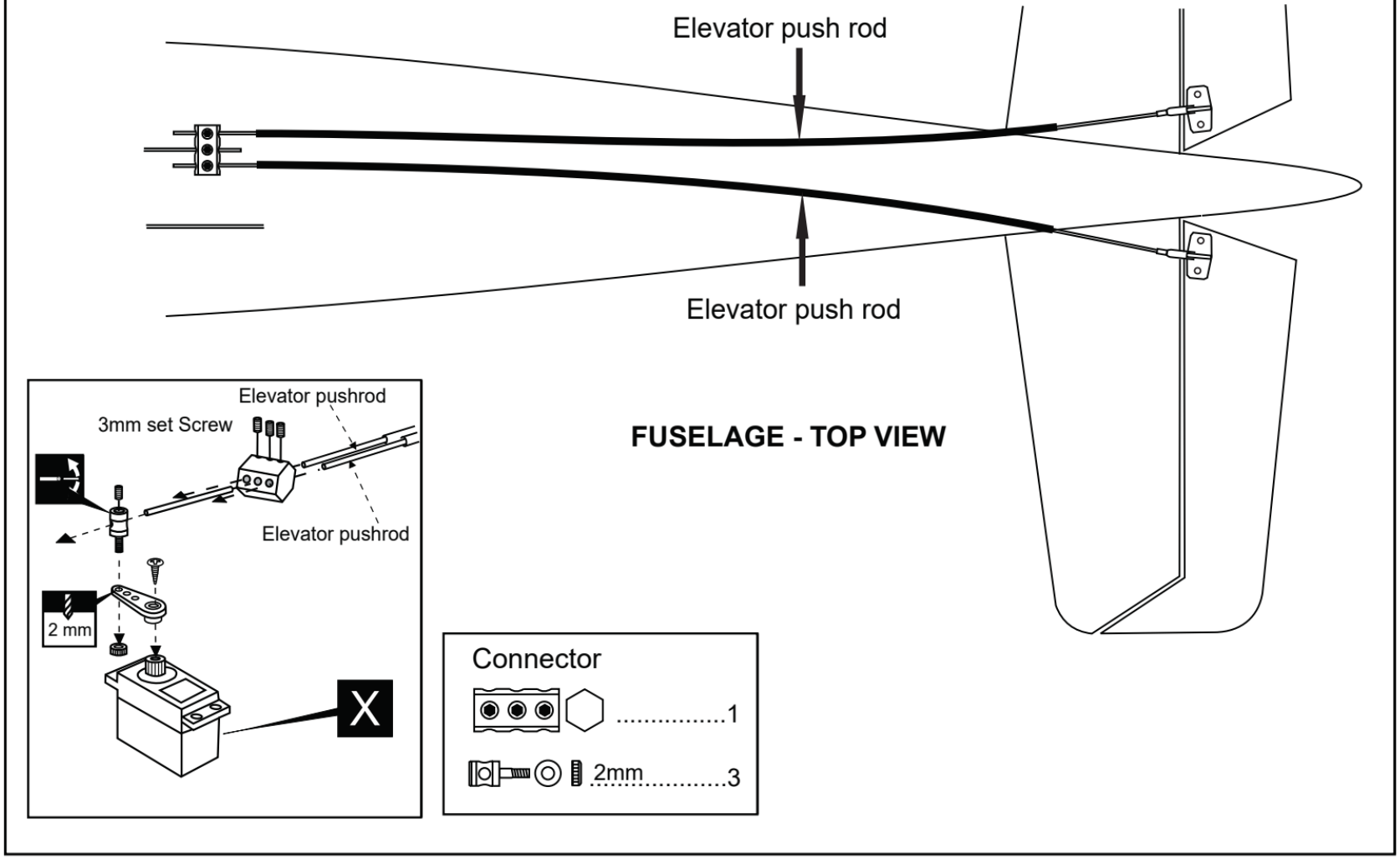

15-Installation the Wing

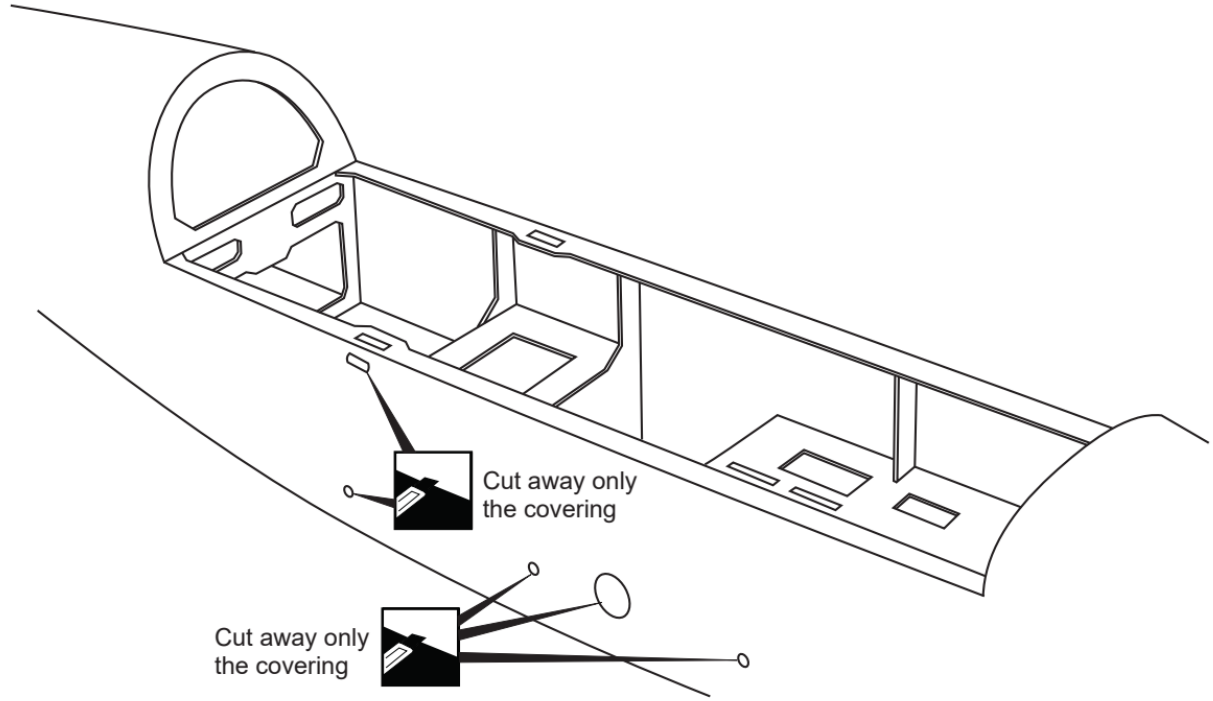

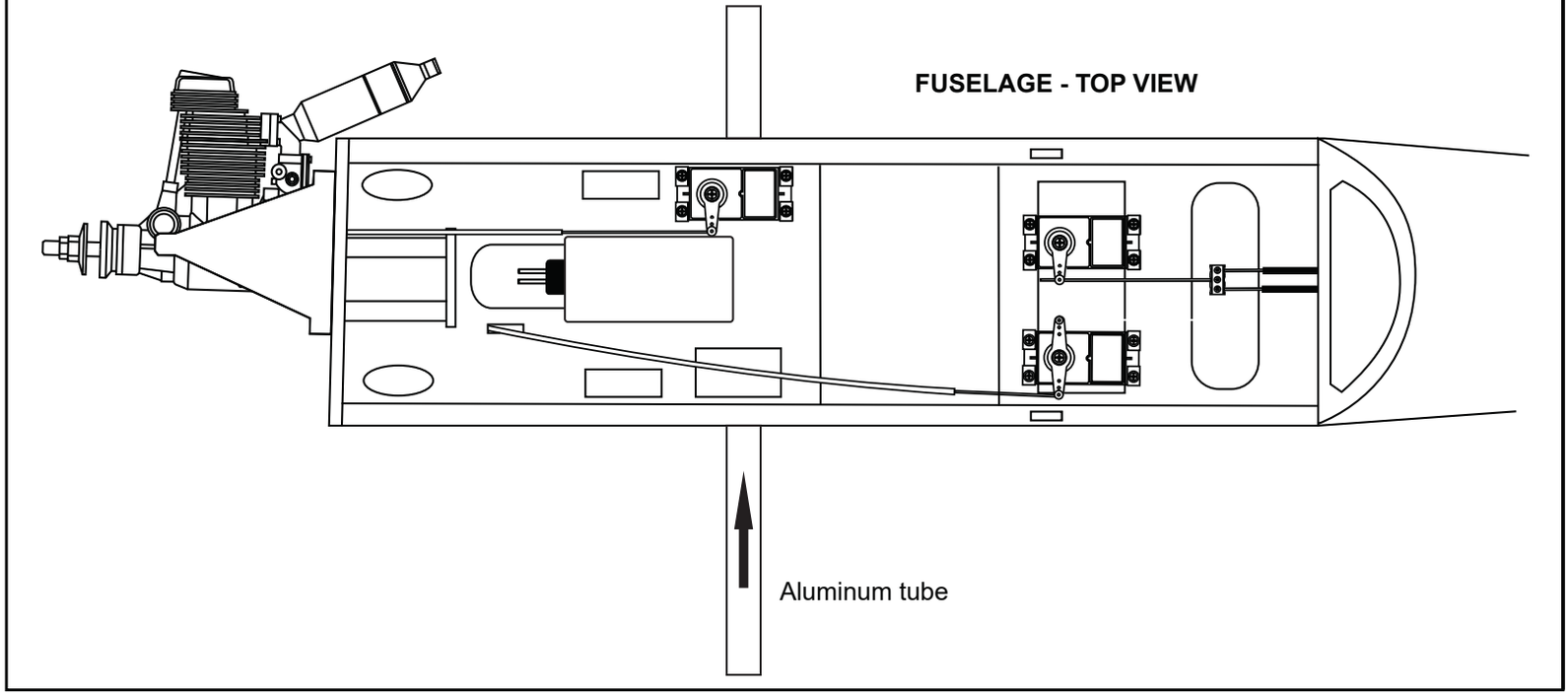

16-Installation the Wing

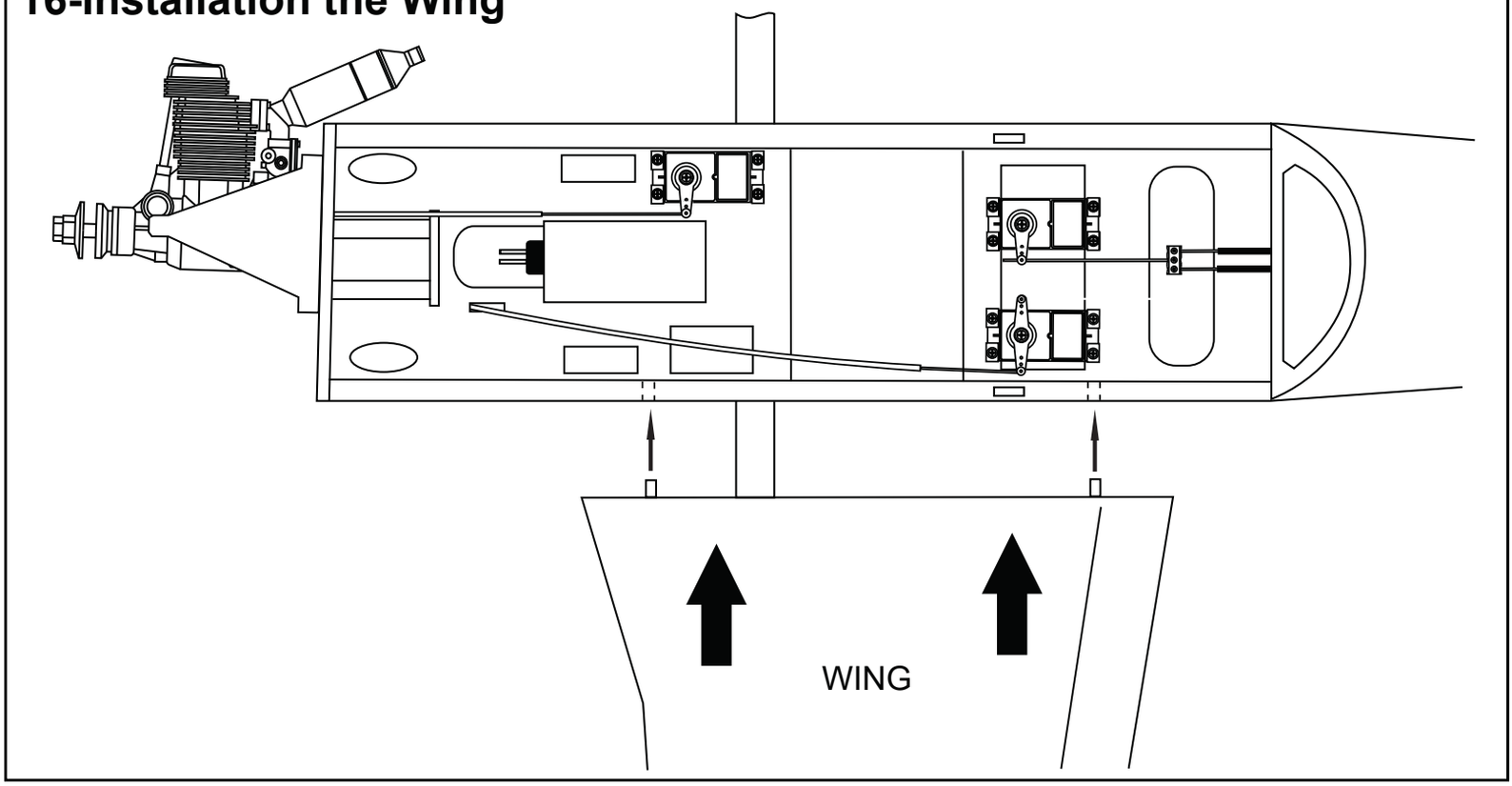

17- Installation the wing

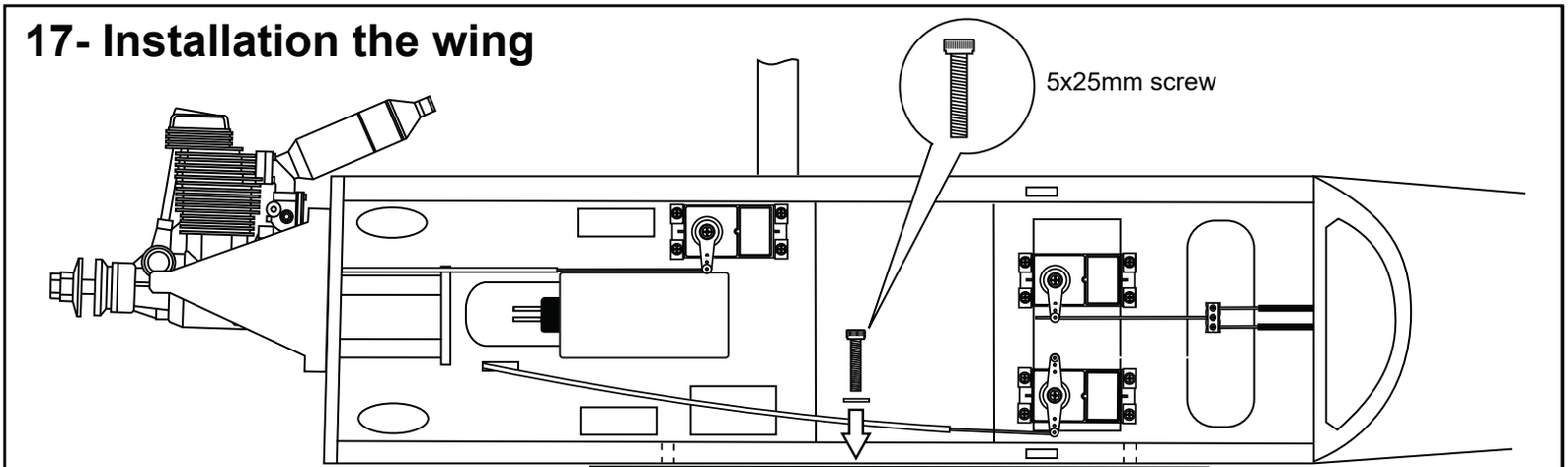

5X25mm screw

.....2

.....2

Secure the wing in place using the 5x25mm screw.

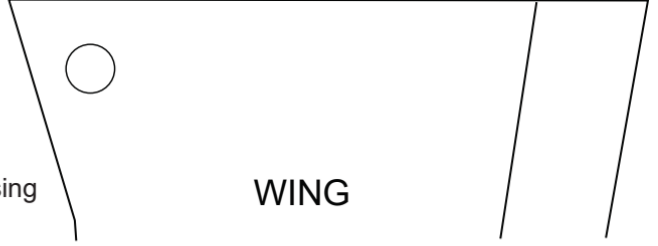

18- Decor

Nose Gear door installation

Note: Glue the Right and Left gear door on to the fuselage only. Do not glue them to the cowl if you want to remove the cowl out of the fuselage.

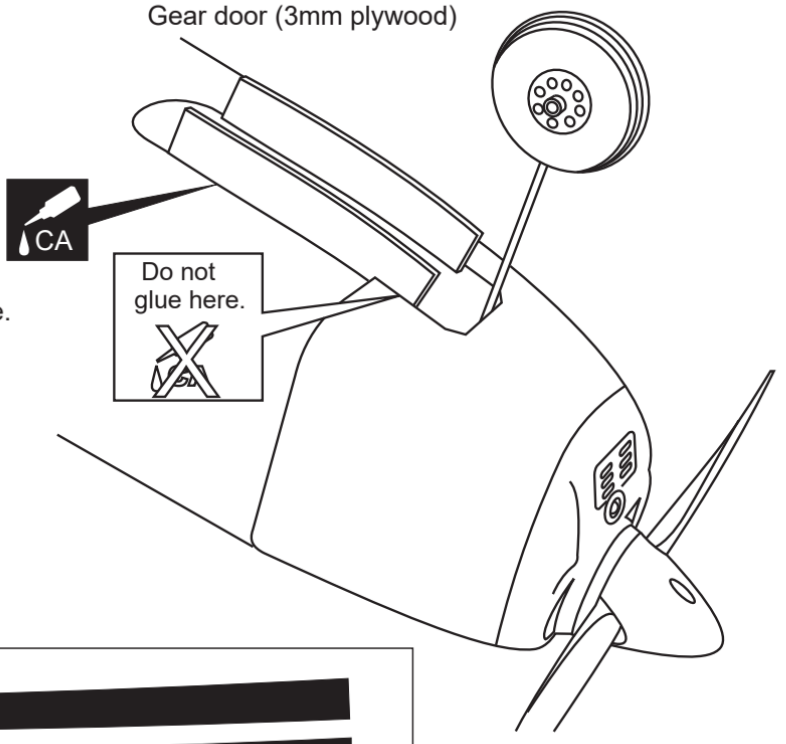

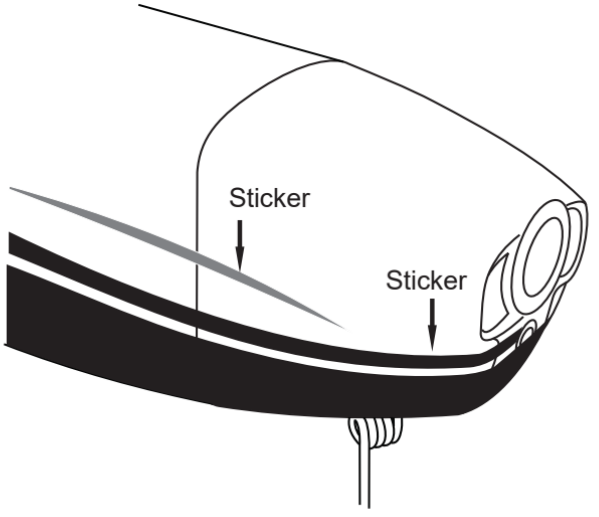

Note: Cut out the stickers and apply them in the proper area. Do not peel the backing paper off all at once.
Peel off one corner of the backing and cut off with scissors.
Arrange sticker on model and when satisfied adhere the corner without backing.
Carefully peel back the rest of the backing while at the same time adhering the rest of the sticker.
Try not to make air bubbles, if there are some, carefully puncture sticker (center of bubble) but not model surface with the tip of the knife or sharp pin and squeeze out the air.
At curves stretch sticker and apply a little heat so that no ceases occur.
Cut off the excess that is produced.

19- Canopy

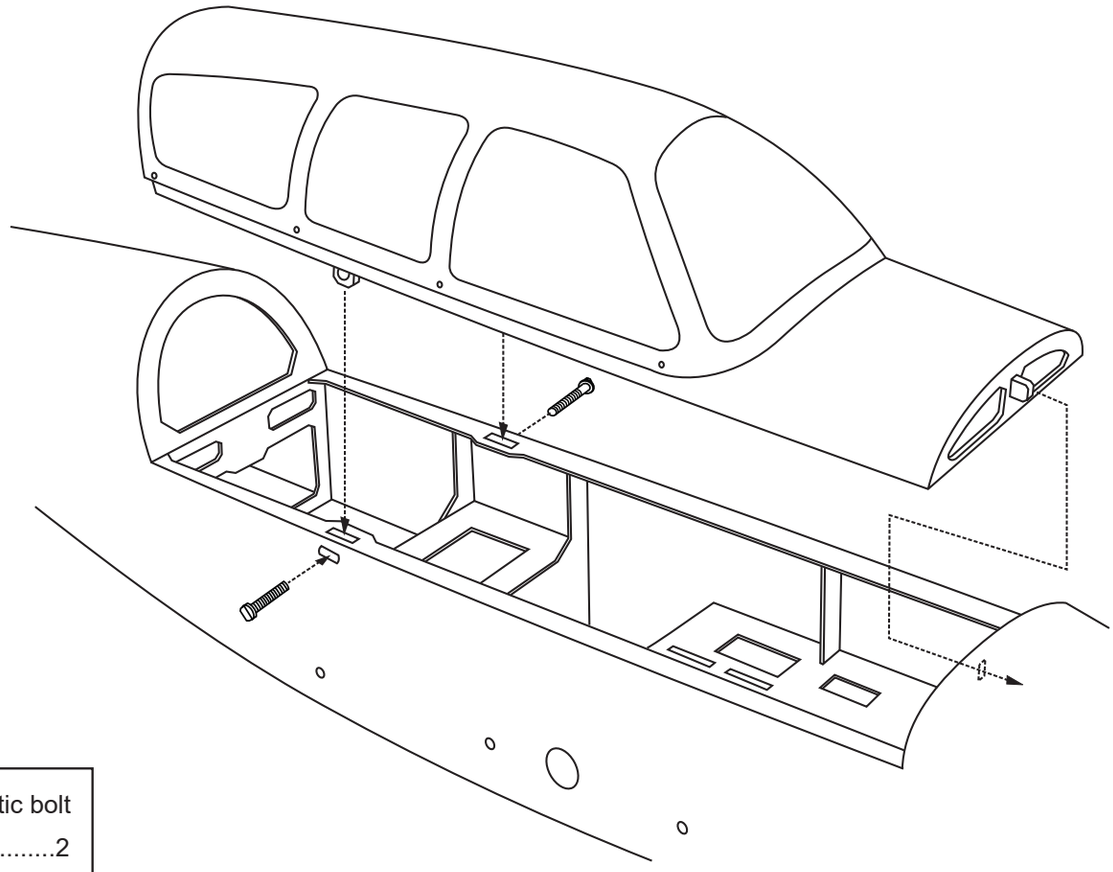

4x25mm plastic bolt

.....2

20- Balance

DO NOT try to fly an out-of-balance model !

Note: If necessary, move the battery pack or add weight to either the tail or nose until the correct balance is achieved.

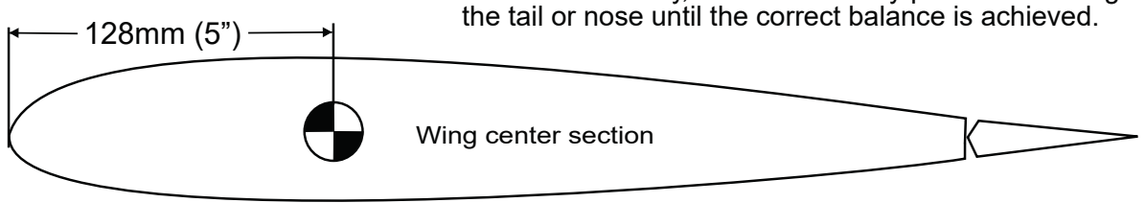

23- Control Surface

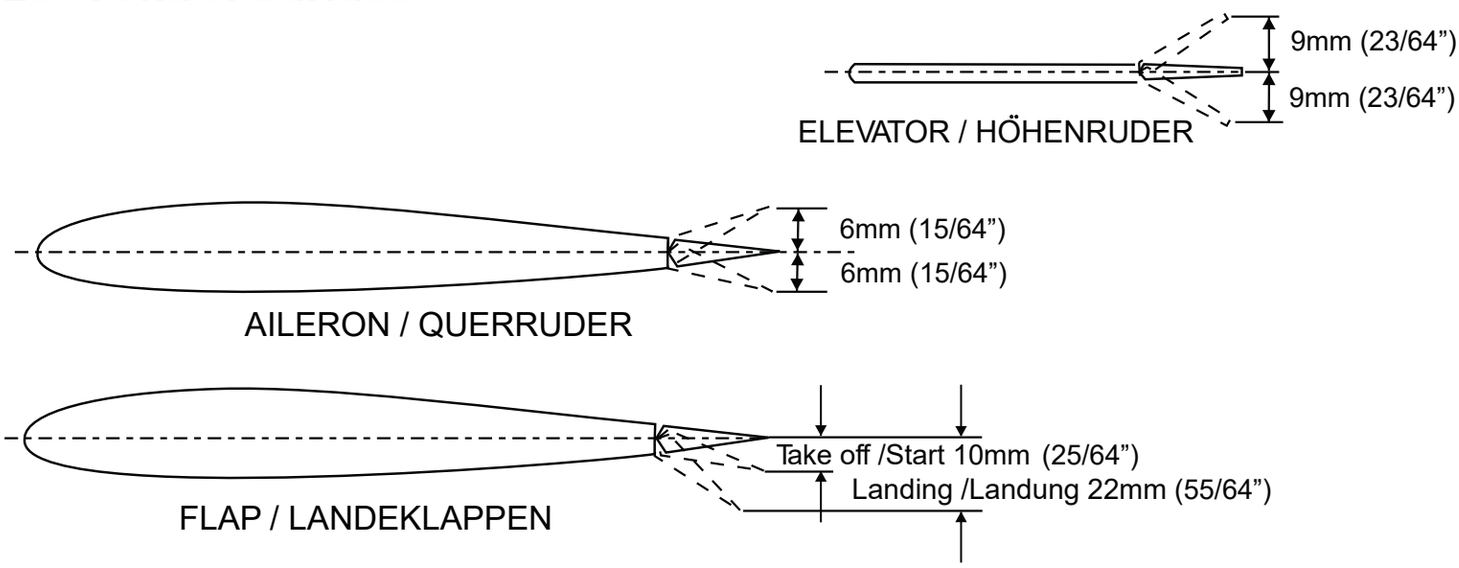

IMPORTANT: Please do not clean your model with pure alcohol, only use liquid soap with water or use glass cleaner to clean on surface of your model to keep the colour not fade.