MURR ELEKTRONIK
stay connected

M12 male 0° A-cod. with cable

PUR AWG24+22 shielded vt UL/CSA+drag ch. 1.5m

DeviceNet, CANopen
Male straight
M12, 5-pole
Plastic housings with good resistance against chemicals and oils.
The resistance to aggressive media should be individually tested for your application. Further details on request.
Further cable lengths on request.

Link to Product

Illustration



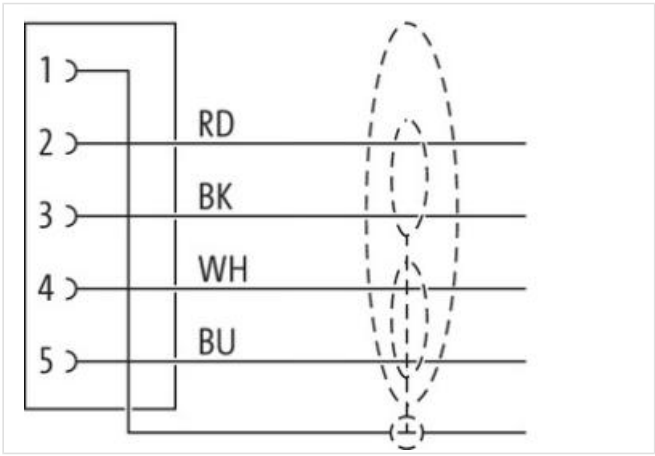

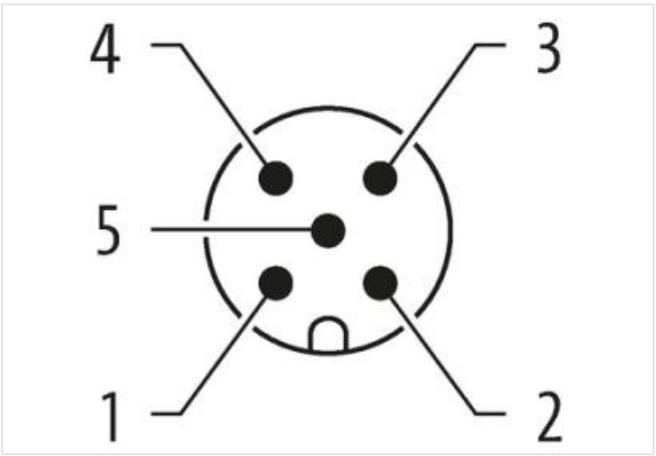

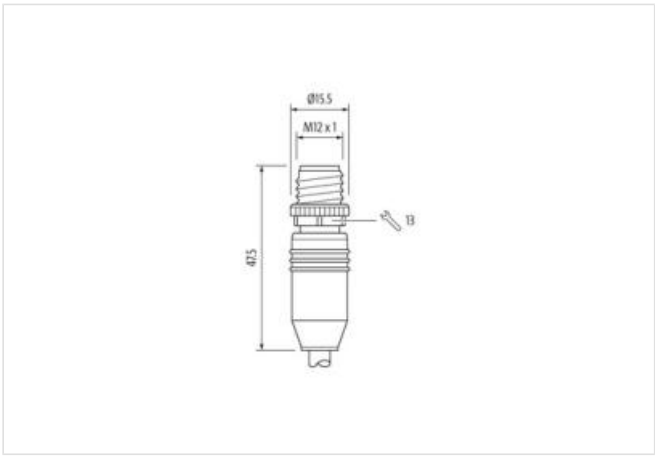

Product may differ from Image

Cable length	1,5 m
Side 1	
Tightening torque	0,6 Nm

The information in this Product-PDF has been compiled with the utmost care.
Liability for the correctness completeness and topicality of the information is restricted to gross negligence. Version: 2024-05-14

MURR ELEKTRONIK
stay connected

Mounting method	inserted, screwed
Family construction form	M12
Thread	M12 x 1
Coding	A
Material	PUR
Width across flats	SW13
Degree of protection (EN IEC 60529)	IP65, IP66K, IP67
Side 2	
Stripping length (jacket)	20 mm
Commercial data	
ECLASS-6.0	27061801
ECLASS-7.0	27061801
ECLASS-8.0	27061801
ECLASS-9.0	27061801
ECLASS-10.1	27060307
ECLASS-11.1	27060307
ECLASS-12.0	27060307
ETIM-5.0	EC001855
customs tariff number	85444290
GTIN	4048879200905
Packaging unit	1
Electrical data | Supply	
Operating voltage AC max.	60 V
Operating voltage DC max.	60 V
Operating voltage AC (UL-listed)	30 V
Operating voltage DC (UL-listed)	30 V
Current operating per contact max.	4 A
Installation | Connection	
Stripping length (jacket)	20 mm
Mounting set	M12 x 1
Device protection | Electrical	
Additional condition protection degree	inserted, screwed
Pollution Degree	3
Rated surge voltage	1,5 kV
Material group (IEC 60664-1)	I
Mechanical data	
Contour for corrugated hose	without
Mechanical data | Material data	
Coating locking	Nickeled
Coating of fitting	nickel plated
Locking material	Zinc die-casting
Material screw connection	Zinc die-casting
Mechanical data | Mounting data	
Mounting method	inserted, screwed, Shaking protection
Environmental characteristics | Climatic	
Operating temperature min.	-25 °C
Operating temperature max.	85 °C
Additional condition temperature range	depending on cable quality
Important installation notes	
Note on strain relief	Protect the connectors by suitable measures from mechanical loads, e.g. by the usage of cable ties.

The information in this Product-PDF has been compiled with the utmost care.
Liability for the correctness completeness and topicality of the information is restricted to gross negligence. Version: 2024-05-14

MURR ELEKTRONIK
stay connected

Note on bending radius	**Attention:** Observe the permissible bending radii when laying cables, as the IP protection class can be endangered by excessive bending forces.
Conformity	
Product standard	DIN EN 61076-2-101 (M12)
Installation | Cable	
Cable identification	803
Jacket Color	violet
Type of Certificate	cURus
Amount stranding	1
Stranding	2 wires twisted
Amount stranding (type 2)	1
Stranding (type 2)	2 Stranded joints twisted
Cable shielding (type)	copper braid, tinned
Cable shielding (coverage)	65 %
Banding	Foil
Drain wire (cross-section)	22 AWG
wire arrangement	(white, blue), (black, red)
Traversing distance (C-track)	5 m
Cable weigth	63,12 g/m
Material jacket	PUR
Shore hardness jacket	90 ± 5 Shore A
Freedom from ingredients (jacket)	lead-free, cadmium-free, CFC-free, halogen-free, silicone-free
Outer-diameter (jacket)	6,9 mm
Tolerance outer diameter (sheath)	± 5 %
Material wire insulation	PE
Amount wires	2
Outer diameter insulation	2,1 mm
Outer diameter tolerance core insulation	± 5 %
Shore hardness wire insulation	64 ± 5 Shore D
Ingredient freeness wire insulation	lead-free, CFC-free, halogen-free
Amount strands (wire)	19
Diameter of single wires	24 AWG
Conductor crosssection (wire)	24 AWG
Drain wire (cross-section)	22 AWG
Material conductor wire	copper stranded wire, tinned
Electrical function wire	Data
Material wire insulation (Data)	PE
Outer diameter wire insulation (Data)	1,5 mm
Tolerance outer diameter wire insulation (data)	± 53 %
Ingredient freeness wire insulation (Data)	lead-free, CFC-free, halogen-free
Amount wires (Data)	2
Amount strands wire (Data)	19
Diameter of single wires (Data)	22 AWG
Conductor crosssection wire (Data)	22 AWG
Material conductor wire (Data)	copper stranded wire, tinned
Electrical function wire (data)	Power
Nominal voltage AC max.	300 V
Current load capacity (standard)	to DIN VDE 0298-4
Current load capacity min. wire	4,5 A
Current load capacity min. Wire (Data)	6 A
Electrical function wire	Data
Electrical function wire (data)	Power
Characteristic impedance	120 Ω ± 10 % @ 1 MHz
Electrical resistance line constant wire	78 Ω/km

The information in this Product-PDF has been compiled with the utmost care.
Liability for the correctness completeness and topicality of the information is restricted to gross negligence. Version: 2024-05-14

Electrical resistance coating wire (Data)	54 Ω/km
AC withstand voltage (wire - wire)	2 kV @ 60 s
Electric capacitance	40000 pF/km
AC withstand voltage (wire - shield)	2 kV @ 60 s
Min. operating temperature (static)	-40 °C
Max. operating temperature (fixed)	80 °C
Operating temperature min. (dynamic)	-30 °C
Operating temperature max. (dynamic)	70 °C
Flame resistance	UL 1581 § 1100 FT2 | IEC 60332-2-2 | UL 1581 § 1090
chemical resistance	Good, application-related testing
Gasoline resistance	Good, application-related testing
Oil resistance	DIN EN 60811-404 | Good, application-related testing
Bending radius (installation)	x Outer diameter
Bending radius (fixed)	6 x Outer diameter
Bending radius (dynamic)	10 x Outer diameter
Travel speed (C-track)	1 Mio.
No. of torsion cycles	2 Mio.
Torsion stress	± 30 °/m
Torsion speed	35 cycles/min

The information in this Product-PDF has been compiled with the utmost care.
Liability for the correctness completeness and topicality of the information is restricted to gross negligence. Version: 2024-05-14