Conrad Electronic SE, Klaus-Conrad-Str. 1, D-92240 Hirschau

Item no.: 2348296

Data Sheet

Mini Micro Switch

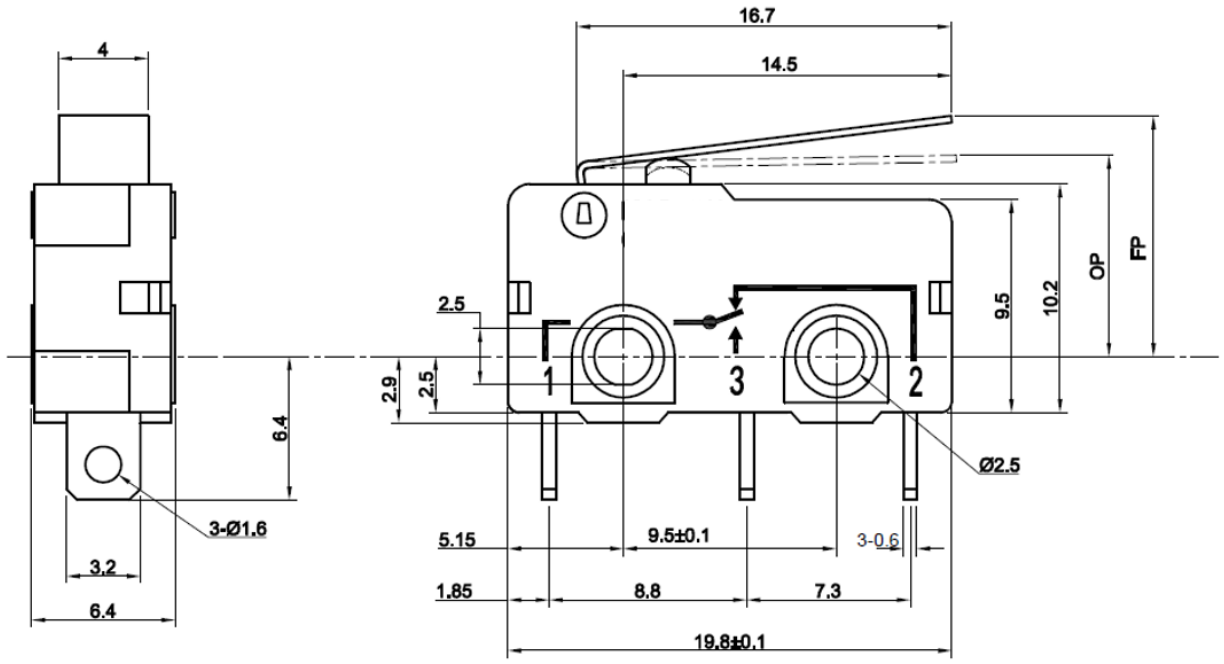

Operating force (OF)	Max.: 0.7 N
Restoring force (RF)	Min.: 0.06 N
Operating position (OP)	9.6 ± 1.0 mm
Free position (FP)	Max.: 12 mm

Rating: 250 V/AC 5 A

Operating temperature: -25 -105 °C (no condensation or icing)

Soldering by hand: 350 °C within 3 seconds

Soldering bath: 260 °C ± 5 °C within 5 seconds