18W FLUSH MOUNT POWER SUPPLY

Our range of encapsulated 18W power supplies offers the perfect solution if your application demands extended service life and protection from harsh environments.
The compact shape is designed to be out of sight, fitting comfortably inside a wall mount installation box. Alternatively the power supply can be fixed to any surface using the integrated mounting holes.
Polyurethane potting resin protects the electronic components from mechanical stress and water ingress to IP68.

Features

- Fully encapsulated
- IP68 waterproof
- MTBF 45 years at 50°C ambient
- Ultra low standby losses
- High Efficiency
- Protection class II
- Various connection options
- Thermally protected and short circuit proof
- Premium quality Japanese brand capacitors
- Manufacturing according to ISO 9001
- Designed in Austria
- Made in the Czech Republic

Test standards	
EN 55014-1 EN 55014-2 EN 55032 EN 55024 EN 60601-1-2	General EMC standards
EN 60950-1 UL 60950-1 EN 62368-1 UL 62368-1	Information technology equipment
EN 60335-1 EN 61558-2-16 EN 61558-1	Household devices
EN60601-1 ES 60601-1	Medical electrical equipment
EN 61347-2-13 EN 61347-1	Electronic controlgear for LED modules

Specification		
Output Power	18	W
Output Voltage	5 – 24	V
Output current	2.5	A
Universal input voltage	90 - 264	V
Operating temperature	-20 - 80	°C
Efficiency	typ. 86	%
Standby Power	typ. 51	mW
Efficiency level	VI	
Means of protection	2 x MOPP	
Insulation of output	SELV	
Leakage current	max. 100	µA

Approvals

Connections	Ordering code
Fixed wire leads	N1hFSW3 18
Insulated input cable	N1hISW3 18
PCB mount pins	N1hPSW3 18
Terminal blocks	N1hKSW3 18

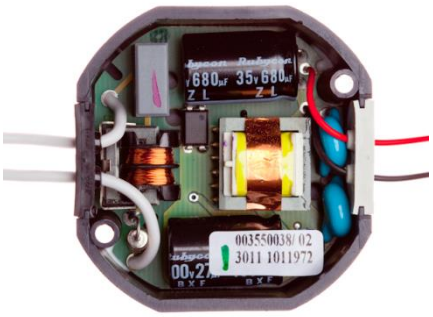

Parameter	Symbol	Min	Typ.	Max	Unit	Test Cond.
Specifications are subject to change without any notice.						
Input Voltage	U_{IN}	90		264	V_{AC}	
	Operation above the specified maximum input voltage may cause damage. Below the minimum input voltage the unit does not meet the specification.					
Input Current	I_{IN}	2	150	500	mA	
Input Frequency	f_{IN}	47	50	63	Hz	
Efficiency	η		86		%	at full load
Stand-by power	P_{stb}		51	75	mW	without load
International efficiency mark			VI			
Output Power	P_{out}			18	W	
Output Voltage	U_{out}	5		24	V_{DC}	
	Other output voltages on request.					
Output voltage tolerance	$\Delta U_{out\ PCB}$			3	%	at PCB
Ripple Voltage	$U_{r\ rms}$			140	mV_{rms}	25°C ambient
Output Current	I_{out}			2.5 2 1.5* $18W/U_{out}$	A	5.0 - 5.9V 6.0 - 8.9V 9.0 - 11.9V 12.0 - 24.0V
	* reduced nameplate output current to meet international efficiency mark VI					
Max. Overload current	$I_{out\ overload}$		165 180 145		% of I_{out}	U_{IN} = 264V U_{IN} = 160V U_{IN} = 90V
Isolation	Galvanic isolation with safety extra low voltage (SELV) output					
Means of protection	2 x MOPP					
Dielectric Strength		4,6			kV_{AC}	50Hz sinusoidal waveform
Leakage current	I_{LK}			100	µA	
Internal Fuse	I_F		2		A	input L
	Approved for direct connection to 16A (20A) mains circuit.					
Operating Temperature	T_{OP}	-20		80	°C	free convection derating >50°C
	Insulated Cable Version Power Supply with H03V2V2 primary Cable min operating temperature is 5°C					
Thermal protection	The power supply is thermally protected against overload. The output voltage is reduced in over temperature conditions, it will return to normal once the temperature is reduced. Prolonged operation at or near the thermal limit will severely shorten operating life and is not recommended.					
Storage Temperature	T_{ST}	-30	25	80	°C	
Humidity				95	%	non condensing
Altitude				3000	m	Operating
Atmospheric Pressure		70		106	kPa	
Degree of protection by enclosure		IP68				cable version insulated cable version
Single component failure	A single component failure does not cause any damage to persons or ambient (fire, explosions, etc).					

Reliability		
MTBF 5V	45.26 years	at 50°C ambient
MTBF 6V-24V	45.18 years	at 50°C ambient
MTBF calculation according to standards	MIL-HDBK-217 F; - Notice 1; - Notice 2	
Maintainability	The power supply is not to be repaired	

Output template	Temperature derating
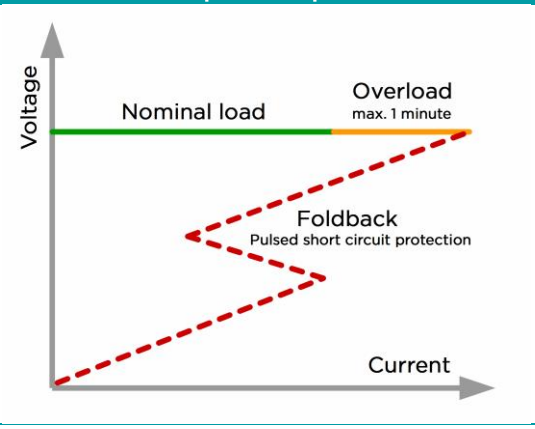	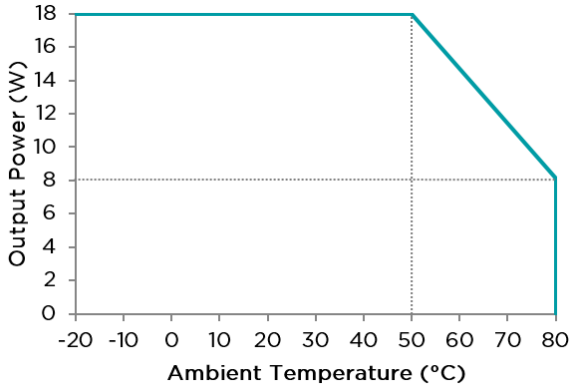
The power supply is protected against short circuit. A shorted output does not cause any damage, and normal operation will resume once the short is removed. The power supply is thermally protected against overload. The power turns off in case of overheating, if the temperature is reduced it returns to normal operation after removing it from main. Prolonged operation at or near the thermal limit will severely shorten operating life and is not recommended.	Linear derating from +50°C at 1,83%/°C to 45% load at +80°C

Laser marking	Marking plate symbol explanation	
Product name Input parameters Output parameters Safety instructions Date code CE marking Approval marks	CE	Conformity with the relevant EU directives.
	EN 22	ENEC is the high quality European Mark for electrical products that demonstrates compliance with European standards (EN).
	c US	NRTL Canada / USA Mark issued by Curtis Straus.
	RoHS conform	The power supply has to be disposed appropriately according the local regulations for Waste Electrical and Electronic Equipment.
		For indoor use only.
		Read instruction manual.

Installation	
	Maximum mounting screw torque M=30Ncm Recommended screws: Slotted pan head screw ISO 1580 max. M3 Alternative: Phillips pan head screw ISO 7045 max. M3 Alternative: fillister socket head screw low design ISO 7984 max. M3 Alternative: fillister socket head screw ISO 4762 max. M3
	The power supply must be installed in an environment that allows heat dissipation, do not enclose it in thermally insulating material.

Cable – cable

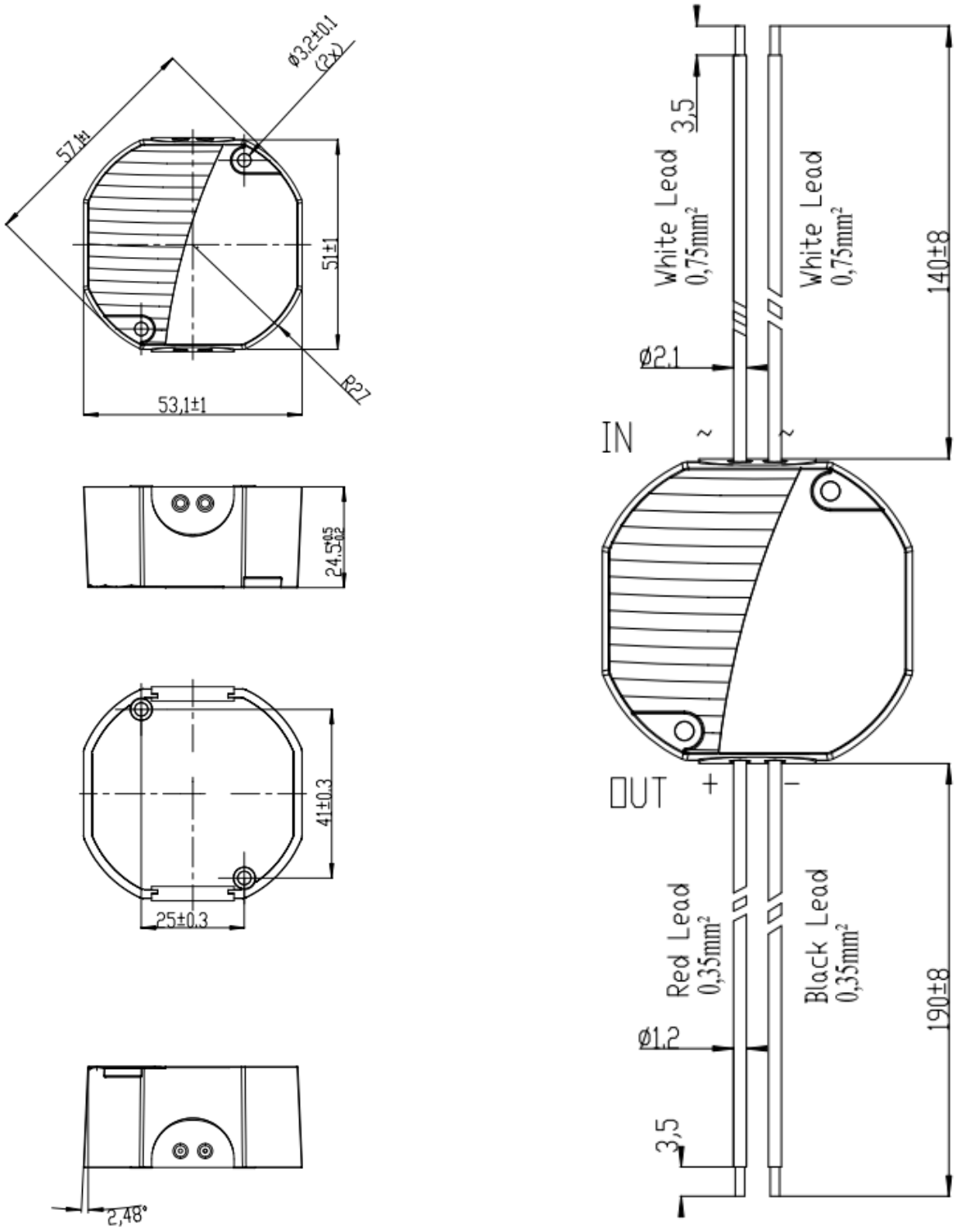
57,1±1
ø3,2±0,1
(2x)
51±1
53,1±1
R27
24,5
41±0,3
25±0,3
2,48°
3,5
White Lead
0,75mm²
ø2,1
IN
140±8
OUT
+
−
Red Lead
0,35mm²
Black Lead
0,35mm²
ø1,2
190±8

Printed circuit board module

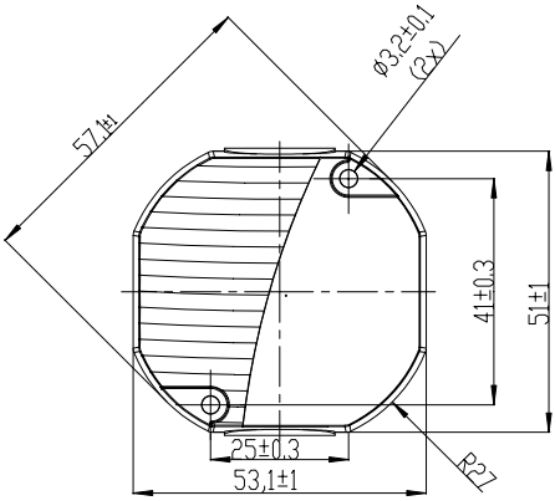

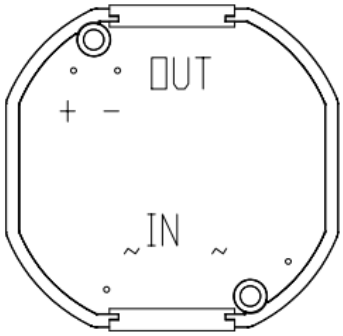

BOTTOM VIEW - Pinout

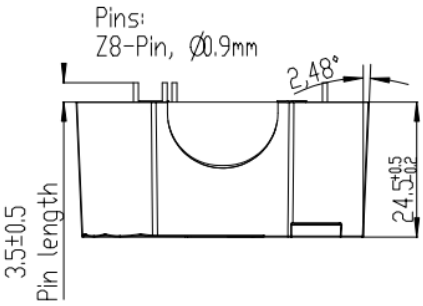

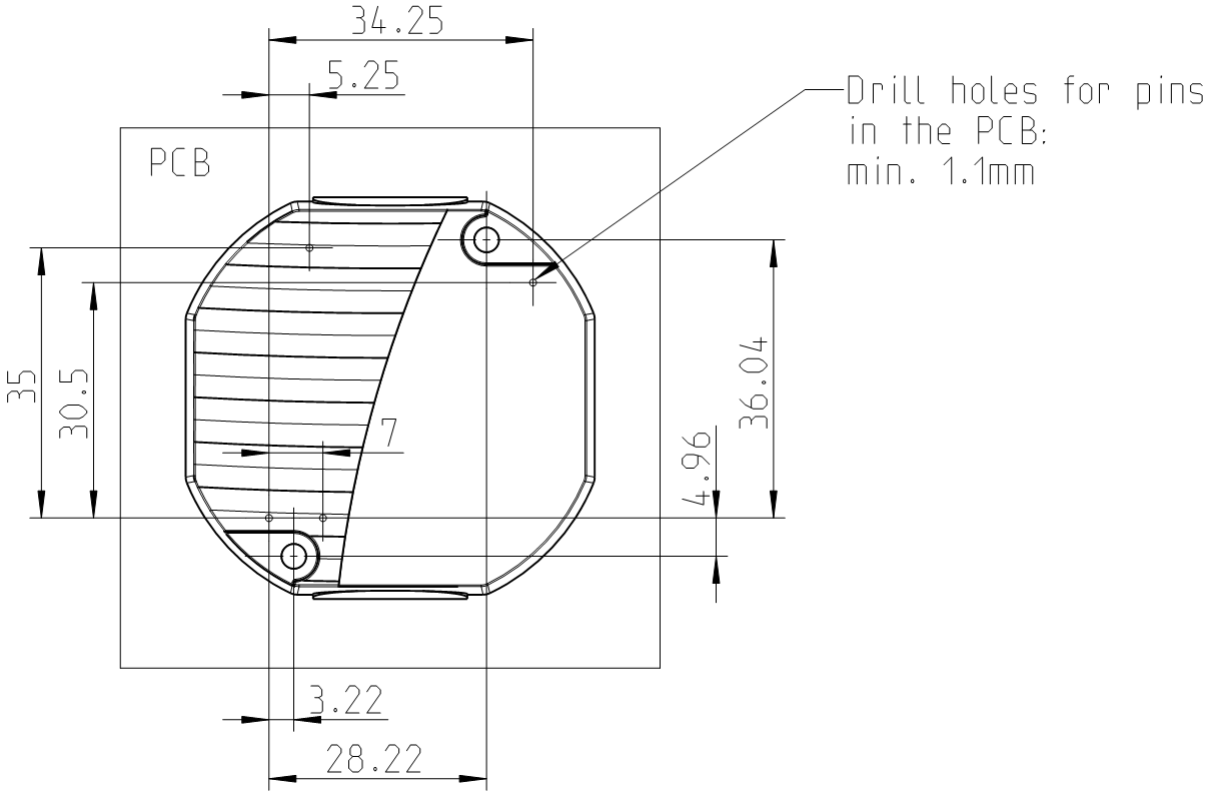

TOP VIEW – pins are on bottom side

Terminal version

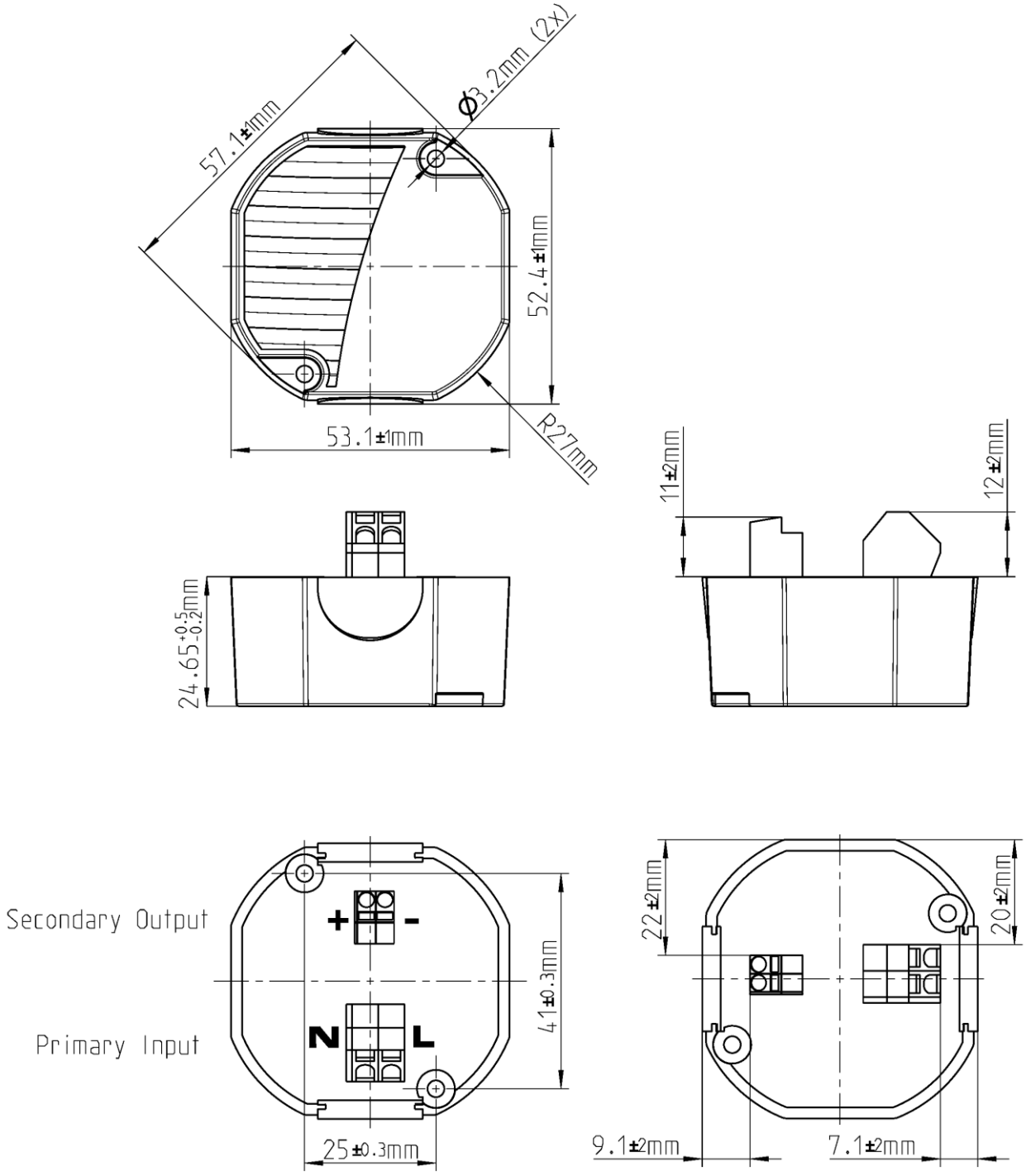

Connectors	Wire cross section (solid)	Wire cross section (stranded)
Prim: Weidmüller contacts LMZF 5/2/135 3.5OR	0,13 - 2,5 mm^2	0,13 – 2,5 mm^2
Sec: Phoenix contacts SPTA 1/2-3,5	0,2 – 1,5 mm^2	0,2 – 1,0 mm^2

Insulated cable version

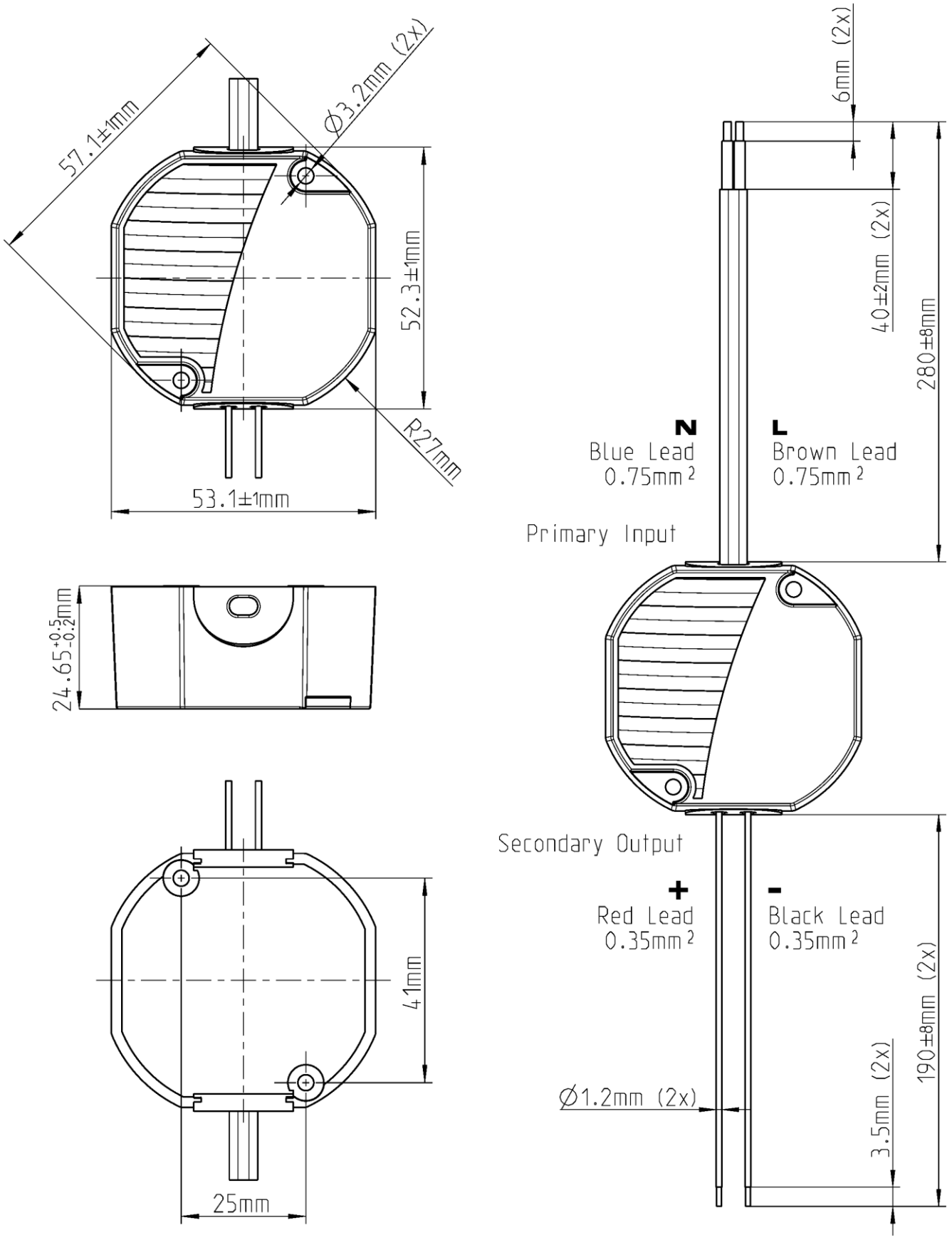

Packaging and weight			
	pcs	kg	size (mm)
Single Carton	1	0,12	95x85x40
Packaging Case	50	6	427x196x165
Full EU-Pallet Layer, 10 Packaging cases	500	81	1200x800x165
1 Full Pallet (9 Layer)	4500	561	1200x800x1500

EMC – Special requirements according medical standard (Only for medical devices)	
Intended use and intended environment	Home healthcare and/or Professional environment
Basic safety and essential performance of the EUT	The power supply unit is not a medical end product, therefore no essential performance is defined by the manufacturer.
Basic safety regarding EMC	The power supply has to ensure proper output voltage according to its characteristics, without service within expected service life.
WARNINGS	Medical electrical equipment needs special precautions regarding EMC and needs to be installed according to EMC information.
	PE of power supply shall be connected to PE of end medical product. User shall not modify power supply.
	The switch mode power supply is designed to achieve the EMI behavior of the specified environment, it includes specific EMI filter to reduce the emissions which are specified in the IEC60601-1-2 standard.
	Please read the complete technical documentation to avoid adverse events to the patient and operator. Read also instructions for use.

EMC - Environment		
The power supply is intended for use in the electromagnetic environment specified below. The customer or the user of the power supply should assure that it is used in such an environment.		
Emissions test	Compliance	Electromagnetic environment - guidance
RF emissions CISPR 11	Group 1	The power supply uses RF energy only for its internal function. Therefore, its RF emissions are very low and are not likely to cause any interference in nearby electronic equipment.
RF emissions CISPR 11	Class B	The power supply is suitable for use in all establishments, including domestic establishments and those directly connected to the public low-voltage power supply network that supplies buildings used for domestic purposes.
Harmonic emissions IEC 61000-3-2	Complies	
Voltage fluctuations / flicker emissions IEC 61000-3-3	Complies	

Immunity test	EN 60601-1-2:2015 test level	Achieved levels according EN 60601-1-2:2015 and achieved levels from additional standards.	Electromagnetic environment - guidance
Electrostatic discharge (ESD) IEC 61000-4-2	± 8 kV contact ±2 kV, ± 4 kV, ± 8 kV, ± 15 kVair	± 8 kV contact ±2 kV, ± 4 kV, ± 8 kV, ± 15 kVair	Floors should be wood, concrete or ceramic tile. If floors are covered with synthetic material, the relative humidity should be at least 30%.
Electrical fast transient/burst IEC 610004-4	± 2 kV 100 kHz repetition frequency	± 2 kV (mains input), 100 kHz	Mains power quality should be that of a typical commercial or hospital environment.

		± 2 kV (DC output), 5 kHz	
Surge IEC 61000-4-5	Line-Line:± 0,5 kV, ± 1 kV Line-to-ground: ± 0 ,5 kV, ± 1 kV, ± 2 kV	±1 kV symmetrical – Differential mode (AC), ±2 kV symmetrical – Common mode (AC), ±0.5 kV symmetrical – Differential mode (DC), ±0.5 kV symmetrical – Common mode (DC), 1.2/50 us Open Circuit Voltage	Mains power quality should be that of a typical commercial or hospital environment.
Voltage dips, short interruptions and voltage variations on power supply input lines IEC 61000-4-11	0 % Ut; 0,5 cycle At 0°, 45°, 90°, 135°, 180°, 225°, 270° and 315° 0 % Ut; 1 cycle and 70 % Ut; 25/30 cycles Single phase: at 0° 0 % Ut; 250/300 cycle	0 % Ut; 0,5 cycle At 0°, 45°, 90°, 135°, 180°, 225°, 270° and 315° 0 % Ut; 1 cycle and 70 % Ut; 25/30 cycles Single phase: at 0° 0 % Ut; 250/300 cycle	Mains power quality should be that of a typical commercial or hospital environment. If the user of the power supply requires continued operation during power mains interruptions, it is recommended that the power supply is powered from an uninterruptible power supply or battery.
Power frequency (50/60 Hz) magnetic field IEC 61000-4-8	30 A/m	1, 3, 30 A/m	Power should be at levels characteristic of frequency magnetic fields a typical location in a typical commercial or hospital environment.
Conducted RF IEC 61000-4-6	6 Vrms 150 kHz to 80 MHz	6 Vrms	Portable and mobile RF communications equipment should not be used closer to any part of the power supply, including cables, than the recommended separation distance. Recommended separation distances see following table.
Radiated RF IEC 61000-4-3	10 V/m 80 MHz to 2.7 GHz	10 V/m	

Field strengths from fixed transmitters such as base stations for radio (cellular/cordless) telephones, land mobile radios, amateur radio, AM and FM radio broadcast and TV broadcast, cannot be predicted theoretically with accuracy. To assess the electromagnetic environment due to fixed RF transmitters an electromagnetic site survey should be considered. If the measured field strength in the location in which the power supply is used, exceeds the applicable RF compliance level above, the power supply should be observed to verify normal operation. If abnormal performance is observed, additional measures may be necessary, such as reorienting or relocating the power supply.

Field strengths from fixed RF transmitters, as determined by an electromagnetic site survey should be less than the compliance level in each frequency range. Over the frequency range 150 kHz to 80 MHz, field strength should be less than 3 V/m.

Interference may occur in the vicinity of equipment marked with the following symbol:

	Frequency range and Level: RF wireless communication equipment			
	Test Frequency (MHz)	Modulation	Immunity Level (V/m)	
Proximity fields from RF wireless communications equipment IEC 61000-4-3	385	**Pulse Modulation: 18Hz	27	Supplementary information: EUT powered at one of the nominal input voltages and frequencies. Dwell time minimum 1s. Actual dwell time noted in results table. Note * - As an alternative to FM modulation, 50% pulse modulation at 18Hz may be used because while it does not represent actual modulation, it would be worst case.
	450	*FM ±5Hz deviation: 1kHz sine	28	
	710 745 780	**Pulse Modulation: 217Hz	9	
	810 870 930	**Pulse Modulation: 18Hz	28	
	1720 1845	**Pulse Modulation: 217Hz	28	

	1970			Note ** - The carrier shall be modulated using 50% duty cycle square wave signal.
	2450	**Pulse Modulation: 217Hz	28	
	5240 5500 5785	**Pulse Modulation: 217Hz	9	

Recommended separation distances between portable and mobile RF communications equipment and the power supply			
The power supply is intended for use in the electromagnetic environment in which radiated RF disturbances are controlled. The customer or the user of the power supply can help prevent electromagnetic interference by maintaining a minimum distance between portable and mobile RF communications equipment (transmitters) and the power supply as recommended below, according to the maximum output power of the communication equipment.			
Rated maximum output power of transmitter (W)	Separation distance according to frequency of transmitter (m)		
	150 kHz to 80 MHz d = 1.2√P	80 MHz to 800 MHz d = 1.2√P	800 MHz to 2.5 GHz d = 2.3√P
0.01	0.12	0.12	0.23
0.1	0.38	0.38	0.73
1	1.2	1.2	2.3
10	3.8	3.8	7.3
100	12	12	23
For transmitters rated at a maximum output power not listed above, the recommended separation distance d in metres (m) can be determined using the equation applicable to the frequency of the transmitter, where P is the maximum output power rating of the transmitter in watts (W) according to the transmitter manufacturer. NOTE 1 At 80 MHz and 800 MHz, the separation distance for the higher frequency range applies. NOTE 4 These guidelines may not apply in all situations. Electromagnetic propagation is affected by absorption and reflection from structures, objects and people.			

Energy Efficiency

This power supply family fulfills Directive 2009/125/EC with Commission Regulation (EU) 2019/1782. The vales “Average active efficiency”, “Efficiency at low load” and “No-load power consumption” are typical measured values, measured at one representative sample at an input voltage of 230VAC.

Input specification		
Input Voltage	100-240	VAC
Input Frequency	50-60	Hz

Output specification						
Output voltage	5	9	12	15	24	VDC
Output current	2,5	1,5	1,5	1,2	0,75	A
Output power	12,5	13,5	18	18	18	W
Average active efficiency (100%/75%/50%/25%)	81,73	84,32	86,79	85,81	86,77	%
Efficiency at low load (10 %)	78,05	79,15	82,37	82,30	79,05	%
No-load power consumption	68	42	43	42	58	mW

Revision	Date	Author	Change
A	26.11.2015	Mauritz	First edition
B	14.12.2015	Mauritz	Description of symbols from marking plate and EMC added
C	21.03.2016	Mauritz	Output specification changed, Ordering Information changed
D	16.06.2016	Mauritz	Insulated cable version added
E	03.08.2016	Krimmel	Primary Insulation H03V2V2 and ESD upgrade
F	13.09.2016	Mauritz	Medical EMC changed
G	03.02.2017	Krimmel	Operating Temperature increased to 80°C (output power derating), IP68
H	07.07.2017	Mauritz	IP68 added; Mechanical parameter changed
I	07.08.2017	Mauritz	HV testing voltage changed
J	29.09.2017	Mauritz	MTBF added
K	03.04.2018	Krimmel	Update to new document design, add EN 61347
L	23.11.2018	Trethan	Output current
M	12.02.2020	Mauritz	Energy Efficiency added
N	12.02.2020	Mauritz	Trademark Pulse added