CPF0402B16KE1 ✔ ACTIVE

Neohm | Neohm CPF

TE Internal #: 7-1879208-8

Neohm CPF, Surface Mount Resistors, Precision Resistor, 2 Termination, 0402, Taped & Reeled, .1 %, Thin Film, Resistance Class 1kΩ – 1MΩ, 16K Ω

View on TE.com >

Passive Components > Resistors > Surface Mount Resistors

Resistor Type: **Precision Resistor**

Number of Terminations: **2**

Package Size Code: **0402**

Packaging Method: **Taped & Reeled**

Passive Component Tolerance: **.1 %**

Features

Product Type Features

Product Type	Fixed Resistor
Resistor Type	Precision Resistor
Package Size Code	0402
Element Type	Thin Film

Configuration Features

Number of Resistors	1

Electrical Characteristics

Voltage Rating	25 V
Passive Component Tolerance	.1 %
Resistance Class	1kΩ – 1MΩ
Resistance Value	16K Ω
Power Rating	.063 W

Termination Features

Number of Terminations	2
Surface Mount Resistor Termination Type	Solder

Dimensions

Passive Component Dimensions	1 x .5 x .3 mm

Usage Conditions

Temperature Coefficient	±25 ppm/°C

Packaging Features

Packaging Method	Taped & Reeled

Product Compliance

For compliance documentation, visit the product page on TE.com>

EU RoHS Directive 2011/65/EU	Compliant
EU ELV Directive 2000/53/EC	Compliant
China RoHS 2 Directive MIIT Order No 32, 2016	No Restricted Materials Above Threshold
EU REACH Regulation (EC) No. 1907/2006	Current ECHA Candidate List: JAN 2021 (211) Candidate List Declared Against: JAN 2021 (211) Does not contain REACH SVHC
Halogen Content	Low Halogen - Br, Cl, F, I < 900 ppm per homogenous material. Also BFR/CFR/PVC Free
Solder Process Capability	Reflow solder capable to 260°C

Product Compliance Disclaimer

This information is provided based on reasonable inquiry of our suppliers and represents our current actual knowledge based on the information they provided. This information is subject to change. The part numbers that TE has identified as EU RoHS compliant have a maximum concentration of 0.1% by weight in homogenous materials for lead, hexavalent chromium, mercury, PBB, PBDE, DBP, BBP, DEHP, DIBP, and 0.01% for cadmium, or qualify for an exemption to these limits as defined in the Annexes of Directive 2011/65/EU (RoHS2). Finished electrical and electronic equipment products will be CE marked as required by Directive 2011/65/EU. Components may not be CE marked. Additionally, the part numbers that TE has identified as EU ELV compliant have a maximum concentration of 0.1% by weight in homogenous materials for lead, hexavalent chromium, and mercury, and 0.01% for cadmium, or qualify for an exemption to these limits as defined in the Annexes of Directive 2000/53/EC (ELV). Regarding the REACH Regulation, the information TE provides on SVHC in articles for this part number is based on the latest European Chemicals Agency (ECHA) 'Guidance on requirements for substances in articles' posted at this URL: https://echa.europa.eu/guidance-documents/guidance-on-reach

Compatible Parts

TE Part # 3-1879216-5
CPF0402 200K 0.1% 25PPM 1K RL

TE Part # 1-1879417-9
CPF 0603 1M0 0.1% 25PPM 1K RL

TE Part # 1879417-8
CPF0603 1M0 0.1% 25PPM 5K RL

TE Part # 1-1614959-4
CPF0805 2M0 0.1% 25PPM 1K RL

TE Part # 9-1879216-1
CPF 0402 158K 0.1% 25PPM 5K RL

Also in the Series | Neohm CPF

Surface Mount Resistors(3022)

Customers Also Bought

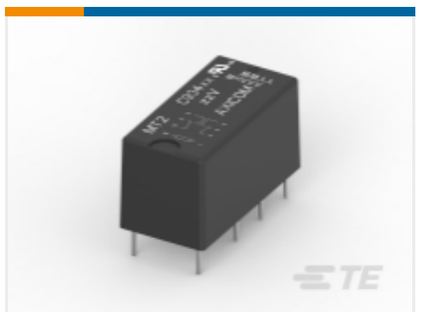

TE Part #1462000-1
AXICOM MT2 HIGH SENSITIVE

TE Part #163304-2
MATENLOK SOCKET SDW

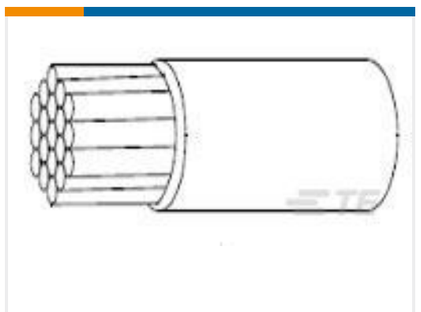

TE Part #216111-002
22759/32-26-9

TE Part #1-1879216-6
CPF 0402 71K5 0.1% 25PPM 1K RL

TE Part #9-1879061-9
CPF0402 120K 0.1% 25PPM 5K RL

TE Part #2176185-9
CRGH0805 1% 2K2 0.33W

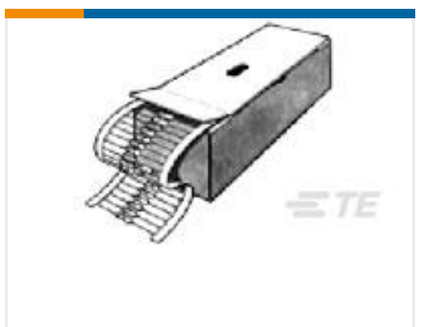

TE Part #2176081-9
EP 1W (S) 220R 5%

TE Part #2176185-4
CRGH0805 1% 560R 0.33W

TE Part #1622674-1
LR2 1% 10K

TE Part #211011-4
AMPLIMITE CONN SVR,26 POS,TRW

Documents

Product Drawings

CPF 0402 16K 0.1% 25PPM 1K RL

English

CAD Files

3D PDF

3D

Customer View Model

ENG_CVM_CVM_7-1879208-8_BA.2d_dxf.zip

English

Customer View Model

ENG_CVM_CVM_7-1879208-8_BA.3d_igs.zip

English

Customer View Model

ENG_CVM_CVM_7-1879208-8_BA.3d_stp.zip

English

By downloading the CAD file I accept and agree to the Terms and Conditions of use.

Datasheets & Catalog Pages

1309350_PASSIVE_COMPONENT

English

8-1773459-4_POWER_FILTERING_AND_RESISTIVE_SOLUTIONS_FOR_ELEVATORS_AND_ESCALATORS

English

CPF-1016

English

Product Environmental Compliance

TE Material Declaration

English