STM065C6N ✔ ACTIVE

Nanonics

TE Internal #: 1589481-8

PCB Mount Header, Horizontal, Wire-to-Board, 65 Position, .64mm [.025in] Centerline, 2 Row, Tin-Lead, Natural Housing Color, Printed Circuit Board

View on TE.com >

Connectors > PCB Connectors > Wire-to-Board Connectors > Wire-to-Board Headers & Receptacles

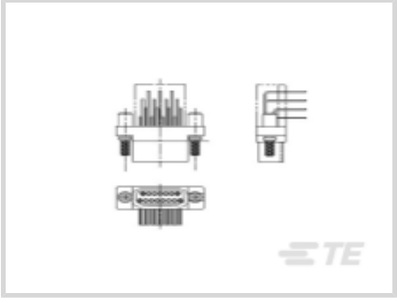

PCB Connector Assembly Type: **PCB Mount Header**

PCB Mount Orientation: **Horizontal**

Connector System: **Wire-to-Board**

Number of Positions: **65**

Centerline (Pitch): **.64 mm [.025 in]**

Features

Product Type Features

PCB Connector Assembly Type	PCB Mount Header
Connector System	Wire-to-Board
Sealable	No
Connector & Contact Terminates To	Printed Circuit Board

Configuration Features

PCB Mount Orientation	Horizontal
Number of Positions	65
Number of Rows	2

Contact Features

Contact Retention Within Housing	Without
PCB Contact Termination Area Plating Material	Tin-Lead
Contact Base Material	Brass
Contact Mating Area Plating Material	Tin-Lead
Contact Mating Area Plating Material Thickness	1.27 – 2.28 µm[50 – 90 µin]
Contact Type	Pin

Termination Features

Rectangular Termination Post & Tail Thickness	.18 mm[.008 in]

Rectangular Termination Post & Tail Width	.23 mm[.009 in]
Termination Post & Tail Length	2.29 mm[.09 in]
Termination Method to Printed Circuit Board	Through Hole - Solder

Mechanical Attachment

Surface Mount Extended Leads	Without
Mounting/Mating Hardware	With
Strain Relief	Without
Mating Alignment Type	Polarization
Mating Alignment	With
Hardware Type	1.0 mm Captive Jackscrew
Panel Mount Feature	Without
Mating Retention Type	Jackscrew
PCB Mount Alignment	Without
Mating Retention	With
PCB Mount Retention	Without
Connector Mounting Type	Board Mount

Housing Features

Housing Plating Material	Nickel
Centerline (Pitch)	.64 mm[.025 in]
Housing Color	Natural
Housing Material	LCP (Liquid Crystal Polymer)

Dimensions

Connector Length	25.62 mm[1.009 in]
Connector Height	3.2 mm[.126 in]
Row-to-Row Spacing	1.02 mm[.04 in]

Operation/Application

Circuit Application	Power

Packaging Features

Packaging Quantity	1
Packaging Method	Package

Product Compliance

For compliance documentation, visit the product page on TE.com>

EU RoHS Directive 2011/65/EU	Not Compliant
EU ELV Directive 2000/53/EC	Not Compliant
China RoHS 2 Directive MIIT Order No 32, 2016	Restricted Materials Above Threshold
EU REACH Regulation (EC) No. 1907/2006	Current ECHA Candidate List: JAN 2021 (211) Candidate List Declared Against: JUN 2020 (209) SVHC > Threshold: Pb (.4% in Plating) Article Safe Usage Statements: Do not eat, drink or smoke when using this product. Wash thoroughly after handling. Recycle if possible and dispose of the article by following all applicable governmental regulations relevant to your geographic location.
Halogen Content	Not Yet Reviewed for halogen content
Solder Process Capability	Not lead free process capable

Product Compliance Disclaimer

This information is provided based on reasonable inquiry of our suppliers and represents our current actual knowledge based on the information they provided. This information is subject to change. The part numbers that TE has identified as EU RoHS compliant have a maximum concentration of 0.1% by weight in homogenous materials for lead, hexavalent chromium, mercury, PBB, PBDE, DBP, BBP, DEHP, DIBP, and 0.01% for cadmium, or qualify for an exemption to these limits as defined in the Annexes of Directive 2011/65/EU (RoHS2). Finished electrical and electronic equipment products will be CE marked as required by Directive 2011/65/EU. Components may not be CE marked. Additionally, the part numbers that TE has identified as EU ELV compliant have a maximum concentration of 0.1% by weight in homogenous materials for lead, hexavalent chromium, and mercury, and 0.01% for cadmium, or qualify for an exemption to these limits as defined in the Annexes of Directive 2000/53/EC (ELV). Regarding the REACH Regulation, the information TE provides on SVHC in articles for this part number is based on the latest European Chemicals Agency (ECHA) 'Guidance on requirements for substances in articles' posted at this URL: https://echa.europa.eu/guidance-documents/guidance-on-reach

Compatible Parts

TE Part # 9-1589665-3
302-0004-01 = CLEADFRAME

Customers Also Bought

TE Part #424287-000
TXR40SJ00-1204AI

TE Part #1617002-6
B07A112BB1 = RELAY.

TE Part #CN8459-000
55PC0132-12-3/5/6

TE Part #CN8575-000
55PC1124-26-8/8-8

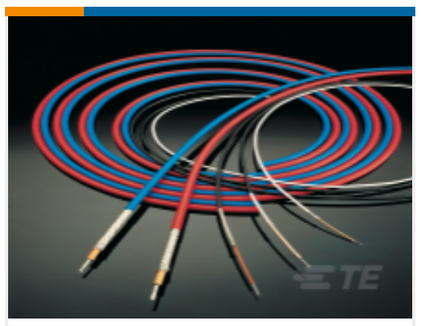

TE Part #CN8505-000
7726D0664-9

TE Part #CA8086-000
HEX40-AB-90-09-A1-2

TE Part #306939-000
TXR40BW90-1408AI

TE Part #919177-000
TXR76AB00-1606AI

TE Part #CB5444-000
XFFR-30X25

TE Part #G-NSDPL2-003
NS-15/DPL2-UXG

Documents

Product Drawings

STM065C6N = THRU-HOLE

English

CAD Files

3D PDF

3D

Customer View Model

ENG_CVM_CVM_1589481-8_U.2d_dxf.zip

English

Customer View Model

ENG_CVM_CVM_1589481-8_U.3d_igs.zip

English

Customer View Model

ENG_CVM_CVM_1589481-8_U.3d_stp.zip

English

By downloading the CAD file I accept and agree to the Terms and Conditions of use.

Datasheets & Catalog Pages

1589481 Nanonics Cross Reference

English