SSM025PC2DC012N ✔ ACTIVE

Nanonics

TE Internal #: 1-1589456-8

Standard Rectangular Connectors, Connector Assembly, Plug, Mating Alignment, Polarization Mating Alignment Type, Mating Retention

View on TE.com >

Connectors > Rectangular Connectors > Standard Rectangular Connectors

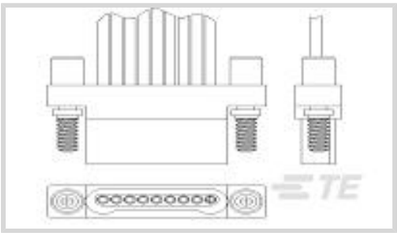

Connector Product Type: **Connector Assembly**

Connector & Housing Type: **Plug**

Mating Alignment: **With**

Mating Alignment Type: **Polarization**

Mating Retention: **With**

Features

Product Type Features

Product Style	Assembly
Shape	Rectangular
Wire/Cable Type	Stranded
Connector Type	Connector Assembly
Housing Type	Plug
Connector Product Type	Connector Assembly
Connector & Housing Type	Plug
Connector System	Cable-to-Cable
Sealable	No

Configuration Features

Number of Cavities	25
Number of Positions	25
Number of Rows	1
Panel Gasket	Without

Electrical Characteristics

Operating Voltage	500 VAC

Contact Features

Contact Layout	In-line

Contact Type	Pin
Wire Contact Termination Area Plating Material	Gold
Contact Underplating Material	Nickel
Contact Mating Area Plating Material	Gold
Contact Retention Within Housing	Without
Contact Current Rating (Max)	1 A

Mechanical Attachment

Panel Mount	No
Panel Mount Feature	Without
Mating Alignment	With
Mating Alignment Type	Polarization
Mating Retention	With
Mating Retention Type	Jackscrew
Connector Mounting Type	Cable Mount (Free-Hanging)

Housing Features

Housing Material	Aluminum
Centerline (Pitch)	.64 mm[.025 in]

Dimensions

Wire Size	.05 mm^2

Usage Conditions

Operating Temperature Range	-200 – 200 °C[-328 – 392 °F]

Operation/Application

Shielded	No
Circuit Application	Signal

Packaging Features

Packaging Method	Package
Packaging Quantity	1

Product Compliance

For compliance documentation, visit the product page on TE.com>

EU RoHS Directive 2011/65/EU	Compliant
EU ELV Directive 2000/53/EC	Compliant

China RoHS 2 Directive MIIT Order No 32, 2016	No Restricted Materials Above Threshold
EU REACH Regulation (EC) No. 1907/2006	Current ECHA Candidate List: JAN 2021 (211) Candidate List Declared Against: JUL 2019 (201) SVHC > Threshold: Not Yet Reviewed
Halogen Content	Not Yet Reviewed for halogen content
Solder Process Capability	Wave solder capable to 265°C

Product Compliance Disclaimer

This information is provided based on reasonable inquiry of our suppliers and represents our current actual knowledge based on the information they provided. This information is subject to change. The part numbers that TE has identified as EU RoHS compliant have a maximum concentration of 0.1% by weight in homogenous materials for lead, hexavalent chromium, mercury, PBB, PBDE, DBP, BBP, DEHP, DIBP, and 0.01% for cadmium, or qualify for an exemption to these limits as defined in the Annexes of Directive 2011/65/EU (RoHS2). Finished electrical and electronic equipment products will be CE marked as required by Directive 2011/65/EU. Components may not be CE marked. Additionally, the part numbers that TE has identified as EU ELV compliant have a maximum concentration of 0.1% by weight in homogenous materials for lead, hexavalent chromium, and mercury, and 0.01% for cadmium, or qualify for an exemption to these limits as defined in the Annexes of Directive 2000/53/EC (ELV). Regarding the REACH Regulation, the information TE provides on SVHC in articles for this part number is based on the latest European Chemicals Agency (ECHA) 'Guidance on requirements for substances in articles' posted at this URL: https://echa.europa.eu/guidance-documents/guidance-on-reach

Customers Also Bought

TE Part #2273110-5
M8 FS - M12 MS CABLE ASSY BL

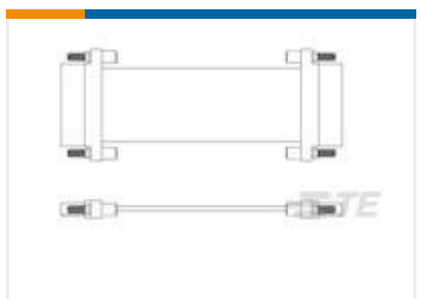

TE Part #1589797-4
JSM025PD2GXC02N = Wdualobe

TE Part #4-1589455-6
SSM005PC2DC036N = WDUALOBE

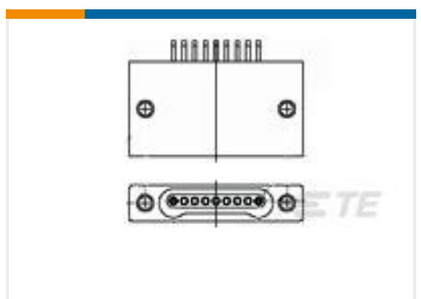

TE Part #3-1589462-9
SSM037L2AQ = SMT CONN

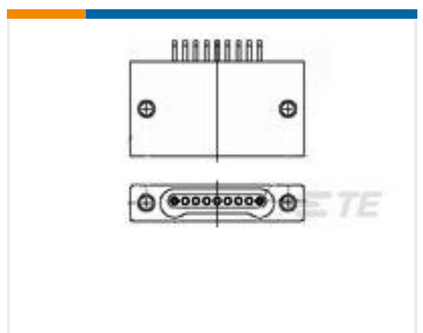

TE Part #4-1589462-3
SSM051L2AQ = SMT CONN

TE Part #YDTS20F25-37PCC001
D38999: Square Flange, 25-37 insert

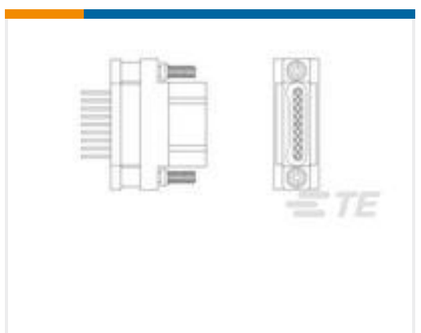

TE Part #1589461-8
SSM025C5N = THRU-HOLE

TE Part #2304890-1
CA,ET, 4POS, NO PULL-TAB,NO DETECT,SHIEL

TE Part #3-1879524-9
CRGH2512 1% 267R 2W

TE Part #4-1589455-3
SSM005PC2DC006N = WDUALOBE

Documents

Product Drawings

SSM025PC2DC012N = WDUALOBE

English

CAD Files

3D PDF

3D

Customer View Model

ENG_CVM_CVM_1-1589456-8_R_c-1-1589456-8-r.2d_dxf.zip

English

Customer View Model

ENG_CVM_CVM_1-1589456-8_R_c-1-1589456-8-r.3d_igs.zip

English

Customer View Model

ENG_CVM_CVM_1-1589456-8_R_c-1-1589456-8-r.3d_stp.zip

English

By downloading the CAD file I accept and agree to the Terms and Conditions of use.

Datasheets & Catalog Pages

1589455 Nanonics Cross Reference

English