84952-8 ✔ ACTIVE

FPC

TE Internal #: 84952-8

FPC Connectors, Flex-to-Board, 8 Position, 1mm [.039in] Centerline, Zero Insertion Force (ZIF), Right Angle, Surface Mount

View on TE.com >

Connectors > PCB Connectors > Wire-to-Board Connectors > FFC, FPC & Ribbon Connectors > FPC Connectors



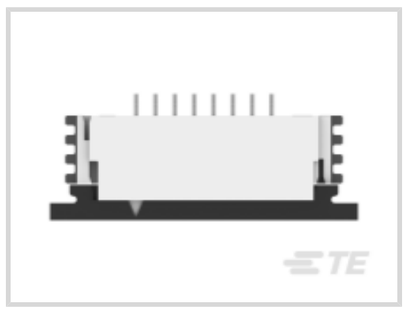



Connector System: **Flex-to-Board**

Number of Positions: **8**

Centerline (Pitch): **1 mm [.039 in]**

Insertion Force Type: **Zero Insertion Force (ZIF)**

PCB Mount Orientation: **Right Angle**

Features

Product Type Features

PCB Connector Assembly Type	PCB Mount Receptacle
Connector Product Type	Connector Assembly
Connector System	Flex-to-Board
Insertion Force Type	Zero Insertion Force (ZIF)
FPC Actuator Type	Stuffer (Plunger Style)
Sealable	No
Connector & Contact Terminates To	Flexible Printed Circuit (FPC)

Configuration Features

Compatible With Wire & Cable Type	FFC, FPC
Number of Rows	1
Number of Positions	8
PCB Mount Orientation	Right Angle

Electrical Characteristics

Operating Voltage	200 VAC

Contact Features

Contact Layout	Inline
PCB Contact Termination Area Plating Material Thickness	2 µm[78.74 µin]
Contact Type	Socket
Contact Mating Area Plating Material Thickness	2 µm[78.74 µin]
PCB Contact Termination Area Plating Material Finish	Bright
Contact Shape & Form	Single Beam
Contact Mating Area Plating Material Finish	Bright
PCB Contact Termination Area Plating Material	Tin
Contact Base Material	Phosphor Bronze
Contact Mating Location	Bottom
Contact Mating Area Plating Material	Tin
Contact Current Rating (Max)	1 A

Termination Features

Termination Method to Printed Circuit Board	Surface Mount

Mechanical Attachment

Mating Alignment	With
PCB Mount Alignment	Without
PCB Mount Retention	With
Connector Mounting Type	Board Mount

Housing Features

Housing Material	LCP (Liquid Crystal Polymer)
Housing Color	Natural
Centerline (Pitch)	1 mm[.039 in]

Dimensions

Connector Length	15.92 mm[.627 in]
Connector Height	2.56 mm[.101 in]
Connector Width	6.54 mm[.258 in]
Accepts Flex Cable Thickness	.3 mm[.012 in]

Usage Conditions

Operating Temperature Range	-40 – 85 °C[-40 – 185 °F][-40 – 185 °F]

Operation/Application

Circuit Application	Signal

Identification Marking

Circuit Identification Feature	With

Packaging Features

Packaging Quantity	1500
Packaging Method	Tape & Reel

Product Compliance

For compliance documentation, visit the product page on TE.com>

EU RoHS Directive 2011/65/EU	Compliant
EU ELV Directive 2000/53/EC	Compliant
China RoHS 2 Directive MIIT Order No 32, 2016	No Restricted Materials Above Threshold
EU REACH Regulation (EC) No. 1907/2006	Current ECHA Candidate List: JAN 2021 (211) Candidate List Declared Against: JAN 2021 (211) Does not contain REACH SVHC
Halogen Content	Not Low Halogen - contains Br or Cl > 900 ppm.
Solder Process Capability	Reflow solder capable to 260°C

Product Compliance Disclaimer

This information is provided based on reasonable inquiry of our suppliers and represents our current actual knowledge based on the information they provided. This information is subject to change. The part numbers that TE has identified as EU RoHS compliant have a maximum concentration of 0.1% by weight in homogenous materials for lead, hexavalent chromium, mercury, PBB, PBDE, DBP, BBP, DEHP, DIBP, and 0.01% for cadmium, or qualify for an exemption to these limits as defined in the Annexes of Directive 2011/65/EU (RoHS2). Finished electrical and electronic equipment products will be CE marked as required by Directive 2011/65/EU. Components may not be CE marked. Additionally, the part numbers that TE has identified as EU ELV compliant have a maximum concentration of 0.1% by weight in homogenous materials for lead, hexavalent chromium, and mercury, and 0.01% for cadmium, or qualify for an exemption to these limits as defined in the Annexes of Directive 2000/53/EC (ELV). Regarding the REACH Regulation, the information TE provides on SVHC in articles for this part number is based on the latest European Chemicals Agency (ECHA) 'Guidance on requirements for substances in articles' posted at this URL: https://echa.europa.eu/guidance-documents/guidance-on-reach

Compatible Parts



TE Part # 84953-8
1MM FPC HORZ.TOP CONT.ASSY 8P

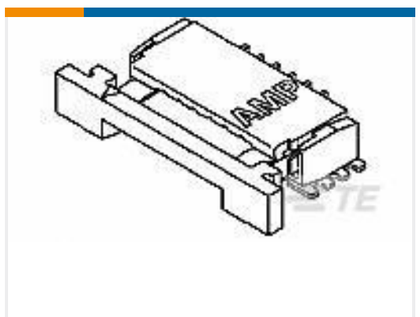

TE Part # 487952-8
008 1MM FPC BTM HORZ

Customers Also Bought



TE Part #1-5177986-2
Free Height Plug Connector: Board-Board, Vertical, 60, 0.8mm

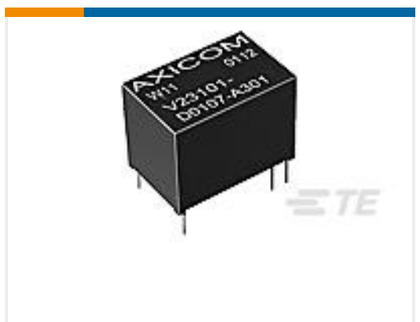

TE Part #1422037-2
V23101D 106A301



TE Part #1-1825058-9
ADE08S04=DIP SWTCH,EXT,SMT-GW

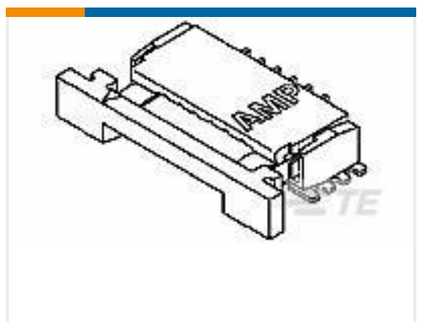

TE Part #1-84952-0
1MM FPC HORZ.BTTM CONT.ASS.10P



TE Part #1-1825027-7
FSMRA6JH04=R/A,TACT PB SW,160G



TE Part #1-1879214-3
CPF 0402 432R 0.1% 25PPM 1K RL

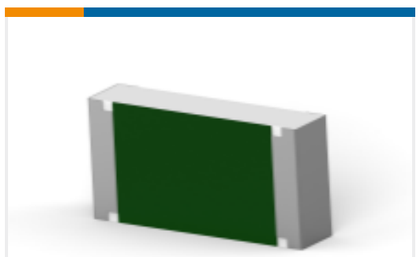

TE Part #1-2176397-8
3502 5R1 1%



TE Part #HPP845E031R4
HTU21D Digital High Accuracy RH/T Sensor

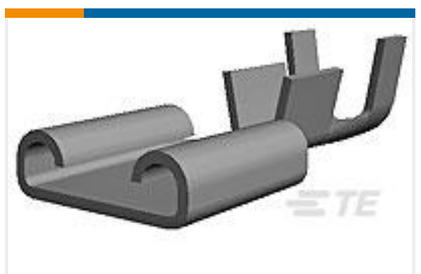

TE Part #160807-2
250 FASTON,REC.,20-16 AWG,BR



TE Part #1-1614959-4
CPF0805 2M0 0.1% 25PPM 1K RL

Documents

Product Drawings

1MM FPC HORZ.BTTM CONT.ASS.8P

English

CAD Files

3D PDF

3D

Customer View Model

ENG_CVM_CVM_84952-8_A.2d_dxf.zip

English

Customer View Model

ENG_CVM_CVM_84952-8_A.3d_igs.zip

English

Customer View Model

ENG_CVM_CVM_84952-8_A.3d_stp.zip

English

By downloading the CAD file I accept and agree to the **Terms and Conditions** of use.

Datasheets & Catalog Pages

1-1773959-6-flexible-printed-circuit-con

English

FPC Connector Family

English

5-1773461-0_Standard_FPC_Connector_Quick_Reference_Guide

English

1-1773959-7-FPC-Connectors-CN

Product Specifications

Product Specification

English

Product Environmental Compliance

MD_84952-8_06302017019_dmtec

English

MD_84952-8_06302017019_dmtec

English

Agency Approvals

UL Report

English