843477-4 ✔ ACTIVE

TE Internal #: 843477-4

TE Internal Description: TOOL, EXTRACTION RESET

View on TE.com >



Product Compliance

For compliance documentation, visit the product page on TE.com>

EU RoHS Directive 2011/65/EU	Compliant
EU ELV Directive 2000/53/EC	Out of Scope
China RoHS 2 Directive MIIT Order No 32, 2016	No Restricted Materials Above Threshold
EU REACH Regulation (EC) No. 1907/2006	Current ECHA Candidate List: JAN 2021 (211) Candidate List Declared Against: JAN 2021 (211) Does not contain REACH SVHC
Halogen Content	Low Halogen - Br, Cl, F, I < 900 ppm per homogenous material. Also BFR/CFR/PVC Free
Solder Process Capability	Not reviewed for solder process capability

Product Compliance Disclaimer

This information is provided based on reasonable inquiry of our suppliers and represents our current actual knowledge based on the information they provided. This information is subject to change. The part numbers that TE has identified as EU RoHS compliant have a maximum concentration of 0.1% by weight in homogenous materials for lead, hexavalent chromium, mercury, PBB, PBDE, DBP, BBP, DEHP, DIBP, and 0.01% for cadmium, or qualify for an exemption to these limits as defined in the Annexes of Directive 2011/65/EU (RoHS2). Finished electrical and electronic equipment products will be CE marked as required by Directive 2011/65/EU. Components may not be CE marked. Additionally, the part numbers that TE has identified as EU ELV compliant have a maximum concentration of 0.1% by weight in homogenous materials for lead, hexavalent chromium, and mercury, and 0.01% for cadmium, or qualify for an exemption to these limits as defined in the Annexes of Directive 2000/53/EC (ELV). Regarding the REACH Regulation, the information TE provides on SVHC in articles for this part number is based on the latest European Chemicals Agency (ECHA) 'Guidance on requirements for substances in articles' posted at this URL: https://echa.europa.eu/guidance-documents/guidance-on-reach

Customers Also Bought



TE Part #788159-2
CPC SERIES 1 SEALED ONE-PIECE



TE Part #1-66105-9
TYPE III CONTACTS LP



TE Part #206966-7
CPC CABLE CLAMPS



TE Part #91515-1
CCII TYPE III+ MNL PIN SKT 30-20 ASSY

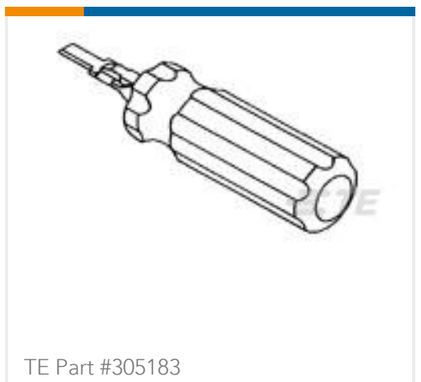

TE Part #305183
EXTRACT TOOL TYPE 2 20-16

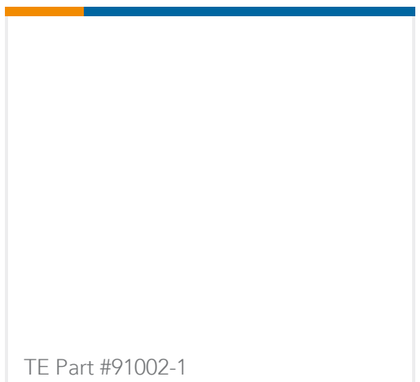

TE Part #91002-1
TOOL SMALL WIRE INS

Documents

Instruction Sheets

Instruction Sheet (U.S.)

English