3-1734839-9 ✔ ACTIVE

FPC

TE Internal #: 3-1734839-9

FPC Connectors, Flex-to-Board, 39 Position, .5mm [.02in] Centerline, Zero Insertion Force (ZIF), Right Angle, Surface Mount

View on TE.com >

Connectors > PCB Connectors > Wire-to-Board Connectors > FFC, FPC & Ribbon Connectors > FPC Connectors > 0.5mm FPC Connectors

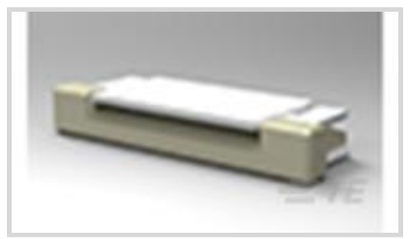

Connector System: **Flex-to-Board**

Number of Positions: **39**

Centerline (Pitch): **.5 mm [.02 in]**

Insertion Force Type: **Zero Insertion Force (ZIF)**

PCB Mount Orientation: **Right Angle**

All 0.5mm FPC Connectors (160)

Features

Product Type Features

PCB Connector Assembly Type	PCB Mount Receptacle
Connector Product Type	Connector Assembly
Connector System	Flex-to-Board
Insertion Force Type	Zero Insertion Force (ZIF)
FPC Actuator Type	Stuffer (Plunger Style)
Sealable	No
Connector & Contact Terminates To	Flexible Printed Circuit (FPC), Printed Circuit Board

Configuration Features

Compatible With Wire & Cable Type	FFC, FPC
Number of Rows	1
Number of Positions	39
PCB Mount Orientation	Right Angle

Electrical Characteristics

Operating Voltage	250 VAC

Contact Features

Contact Layout	Inline
PCB Contact Termination Area Plating Material Thickness	.025 µm[.984 µin]

Contact Type	Socket
Contact Mating Area Plating Material Thickness	.025 µm[.984 µin]
Contact Shape & Form	Single Beam
PCB Contact Termination Area Plating Material	Gold
Contact Base Material	Phosphor Bronze
Contact Mating Location	Top
Contact Mating Area Plating Material	Gold
Contact Current Rating (Max)	.5 A

Termination Features

Termination Method to Printed Circuit Board	Surface Mount

Mechanical Attachment

Mating Alignment	With
PCB Mount Alignment	Without
PCB Mount Retention	With
Connector Mounting Type	Board Mount

Housing Features

Housing Material	LCP (Liquid Crystal Polymer)
Housing Color	Natural
Centerline (Pitch)	.5 mm[.02 in]

Dimensions

Connector Length	24.93 mm[.982 in]
Connector Height	2.05 mm[.08 in]
Connector Width	5.1 mm[.2 in]
Accepts Flex Cable Thickness	.3 mm[.012 in]

Usage Conditions

Operating Temperature Range	-40 – 85 °C[-40 – 185 °F][-40 – 185 °F]

Operation/Application

Circuit Application	Signal

Identification Marking

Circuit Identification Feature	Without

Packaging Features

Packaging Quantity	2000
Packaging Method	Tape & Reel

Product Compliance

For compliance documentation, visit the product page on TE.com>

EU RoHS Directive 2011/65/EU	Compliant
EU ELV Directive 2000/53/EC	Compliant
China RoHS 2 Directive MIIT Order No 32, 2016	No Restricted Materials Above Threshold
EU REACH Regulation (EC) No. 1907/2006	Current ECHA Candidate List: JAN 2021 (211) Candidate List Declared Against: JAN 2021 (211) Does not contain REACH SVHC
Halogen Content	Low Halogen - Br, Cl, F, I < 900 ppm per homogenous material. Also BFR/CFR/PVC Free
Solder Process Capability	Reflow solder capable to 260°C

Product Compliance Disclaimer

This information is provided based on reasonable inquiry of our suppliers and represents our current actual knowledge based on the information they provided. This information is subject to change. The part numbers that TE has identified as EU RoHS compliant have a maximum concentration of 0.1% by weight in homogenous materials for lead, hexavalent chromium, mercury, PBB, PBDE, DBP, BBP, DEHP, DIBP, and 0.01% for cadmium, or qualify for an exemption to these limits as defined in the Annexes of Directive 2011/65/EU (RoHS2). Finished electrical and electronic equipment products will be CE marked as required by Directive 2011/65/EU. Components may not be CE marked. Additionally, the part numbers that TE has identified as EU ELV compliant have a maximum concentration of 0.1% by weight in homogenous materials for lead, hexavalent chromium, and mercury, and 0.01% for cadmium, or qualify for an exemption to these limits as defined in the Annexes of Directive 2000/53/EC (ELV). Regarding the REACH Regulation, the information TE provides on SVHC in articles for this part number is based on the latest European Chemicals Agency (ECHA) 'Guidance on requirements for substances in articles' posted at this URL: https://echa.europa.eu/guidance-documents/guidance-on-reach

Compatible Parts

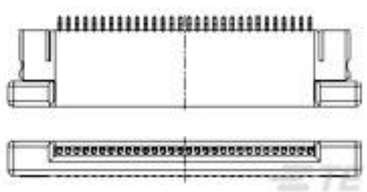

TE Part # 3-1775560-9
FPC CONN. 0.5MM PITCH T/C, 39P

Customers Also Bought



TE Part #1-320551-1
PIDG RING TONGUE TERMINALS

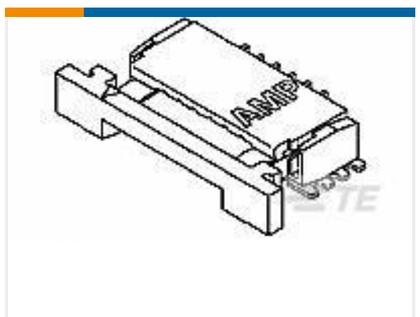

TE Part #1-84952-6
1MM FPC HORZ.BTTM CONT.ASS.16P



TE Part #1-1825910-8
FSM10JH=6MM TACT SWITCH, HIGH TEMP



TE Part #1447360-9
3100069=SEALED FINGR 1715EMBOS



TE Part #1565158-1
SHIELD FINGER 1511



TE Part #1-1825910-0
FSM6JH=6MM TACT SWITCH, HIGH TEMP



TE Part #103330-1
02 MODII HDR DRRA B/A .100CL



TE Part #104353-5
10 MODII HDR DRRA B/A W/HLDWN



TE Part #1423183-1
7032AAB=RLY,STD,DBH,2P,120VAC



TE Part #NB19382001
RNF-100-1/8-YO-STK

Documents

Product Drawings

FPC CONN. 0.5MM PITCH T/C,39P

English

CAD Files

3D PDF

3D

Customer View Model

ENG_CVM_CVM_3-1734839-9_C.2d_dxf.zip

English

Customer View Model

ENG_CVM_CVM_3-1734839-9_C.3d_igs.zip

English

Customer View Model

ENG_CVM_CVM_3-1734839-9_C.3d_stp.zip

English

By downloading the CAD file I accept and agree to the Terms and Conditions of use.

Datasheets & Catalog Pages

1-1773959-6-flexible-printed-circuit-con

English

FPC Connector Family

English

5-1773461-0_Standard_FPC_Connector_Quick_Reference_Guide

English

1-1773959-7-FPC-Connectors-CN

Product Specifications

Product Specification

English