229969-2 ✔ ACTIVE

CHAMP | CHAMP Docking Connectors

TE Internal #: 229969-2

CHAMP Docking Connectors, D-Sub Covers, Dust, 64 Position, Operating Temperature Range -55 – 105 °C [-67 – 221 °F]

View on TE.com >

Connectors > D-Shaped Connectors > D-Sub Accessories > D-Sub Covers



Connector Cover Type: **Dust**

Number of Positions: **64**

Operating Temperature Range: **-55 – 105 °C [-67 – 221 °F]**

Features

Product Type Features

Product Type	Accessory
Connector Cover Type	Dust

Configuration Features

Number of Positions	64

Usage Conditions

Operating Temperature Range	-55 – 105 °C[-67 – 221 °F]

Packaging Features

Packaging Method	Package
Packaging Quantity	1

Product Compliance

For compliance documentation, visit the product page on TE.com>

EU RoHS Directive 2011/65/EU	Compliant
EU ELV Directive 2000/53/EC	Compliant
China RoHS 2 Directive MIIT Order No 32, 2016	No Restricted Materials Above Threshold
EU REACH Regulation (EC) No. 1907/2006	Current ECHA Candidate List: JAN 2021 (211) Candidate List Declared Against: JAN 2021 (211) Does not contain REACH SVHC
Halogen Content	Not Low Halogen - contains Br or Cl > 900 ppm.

Solder Process Capability

Not applicable for solder process capability

Product Compliance Disclaimer

This information is provided based on reasonable inquiry of our suppliers and represents our current actual knowledge based on the information they provided. This information is subject to change. The part numbers that TE has identified as EU RoHS compliant have a maximum concentration of 0.1% by weight in homogenous materials for lead, hexavalent chromium, mercury, PBB, PBDE, DBP, BBP, DEHP, DIBP, and 0.01% for cadmium, or qualify for an exemption to these limits as defined in the Annexes of Directive 2011/65/EU (RoHS2). Finished electrical and electronic equipment products will be CE marked as required by Directive 2011/65/EU. Components may not be CE marked. Additionally, the part numbers that TE has identified as EU ELV compliant have a maximum concentration of 0.1% by weight in homogenous materials for lead, hexavalent chromium, and mercury, and 0.01% for cadmium, or qualify for an exemption to these limits as defined in the Annexes of Directive 2000/53/EC (ELV). Regarding the REACH Regulation, the information TE provides on SVHC in articles for this part number is based on the latest European Chemicals Agency (ECHA) 'Guidance on requirements for substances in articles' posted at this URL: https://echa.europa.eu/guidance-documents/guidance-on-reach

Compatible Parts

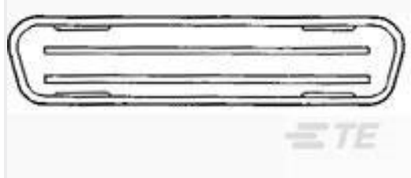

TE Part # 229968-2
COVER, DUST, PLUG, BLUE, CHAMP

Also in the Series | CHAMP Docking Connectors



D-Sub Covers(27)



D-Sub Locking & Mounting(31)



Docking Connector Guide Hardware(5)



Docking Connectors(33)



IDC D-Sub Connectors(85)



PCB D-Sub Connectors(1)

Customers Also Bought



TE Part #0460-245-1290
DEUTSCH SOLID CONTACTS

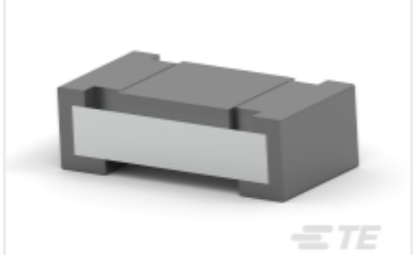

TE Part #2-2176057-0
Thick Film Resistor: Current Sense



TE Part #102394-8
20 AMP MODU MT HSG DR .100CL



TE Part #796689-3
TERMI-BLOK PCB MOUNT 3P.

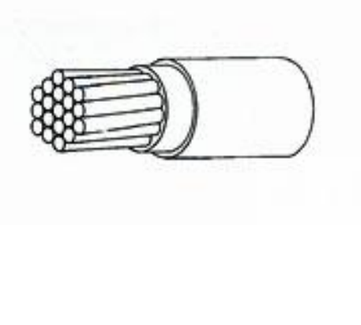

TE Part #218434-000
22759/41-14-9

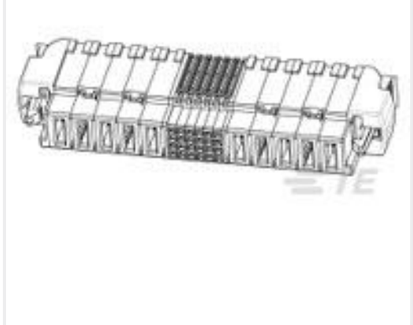

TE Part #1600798-7
STR RCPT ASSY MBXL W/KEYS 2ACP

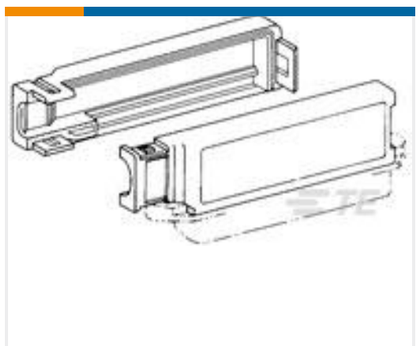

TE Part #1-552496-1
90 DEG COVER KIT-64 POS BLK

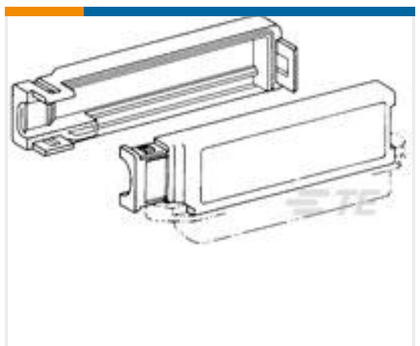

TE Part #2-552496-1
90 DEG COVER KIT-64 POS BLK

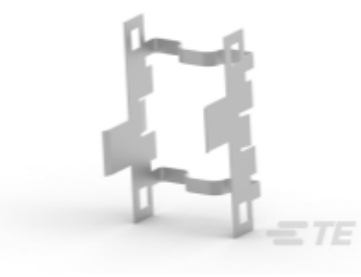

TE Part #1367646-4
SFP accessories



TE Part #1658744-3
SFP 1X4 CAGE ASSY

Documents

Product Drawings

COVER, DUST, RCPT, RED, CHAMP

English

CAD Files

3D PDF

3D

Customer View Model

ENG_CVM_CVM_229969-2_AA.2d_dxf.zip

English

Customer View Model

ENG_CVM_CVM_229969-2_AA.3d_igs.zip

English

Customer View Model

ENG_CVM_CVM_229969-2_AA.3d_stp.zip

English

By downloading the CAD file I accept and agree to the Terms and Conditions of use.

Product Environmental Compliance

TE Material Declaration

English