0250 ! PENDING OBSOLESCENCE

TE Internal #: 2-1437390-5

TE Internal Description: 0250=HD NYLON END SECT (PKGD)

View on TE.com >



Product Compliance

For compliance documentation, visit the product page on TE.com>

EU RoHS Directive 2011/65/EU	Compliant
EU ELV Directive 2000/53/EC	Compliant
China RoHS 2 Directive MIIT Order No 32, 2016	No Restricted Materials Above Threshold
EU REACH Regulation (EC) No. 1907/2006	Current ECHA Candidate List: JAN 2021 (211) Candidate List Declared Against: JUN 2020 (209) SVHC > Threshold: Not Yet Reviewed
Halogen Content	Low Halogen - Br, Cl, F, I < 900 ppm per homogenous material. Also BFR/CFR/PVC Free
Solder Process Capability	Not applicable for solder process capability

Product Compliance Disclaimer

This information is provided based on reasonable inquiry of our suppliers and represents our current actual knowledge based on the information they provided. This information is subject to change. The part numbers that TE has identified as EU RoHS compliant have a maximum concentration of 0.1% by weight in homogenous materials for lead, hexavalent chromium, mercury, PBB, PBDE, DBP, BBP, DEHP, DIBP, and 0.01% for cadmium, or qualify for an exemption to these limits as defined in the Annexes of Directive 2011/65/EU (RoHS2). Finished electrical and electronic equipment products will be CE marked as required by Directive 2011/65/EU. Components may not be CE marked. Additionally, the part numbers that TE has identified as EU ELV compliant have a maximum concentration of 0.1% by weight in homogenous materials for lead, hexavalent chromium, and mercury, and 0.01% for cadmium, or qualify for an exemption to these limits as defined in the Annexes of Directive 2000/53/EC (ELV). Regarding the REACH Regulation, the information TE provides on SVHC in articles for this part number is based on the latest European Chemicals Agency (ECHA) 'Guidance on requirements for substances in articles' posted at this URL: https://echa.europa.eu/guidance-documents/guidance-on-reach

Compatible Parts

TE Part # 1447855-1
7002728009=0230 H D END SECTIO



TE Part # 4-1437390-0
242=H D NYLON SECTION

Customers Also Bought

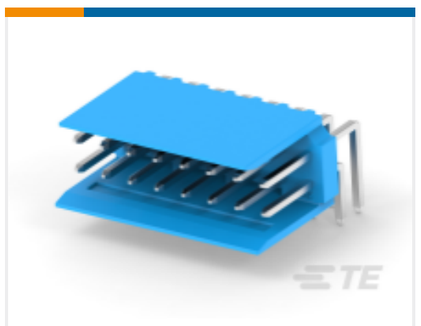

TE Part #281743-4
HE13/HE14 TH Headers, DRRA

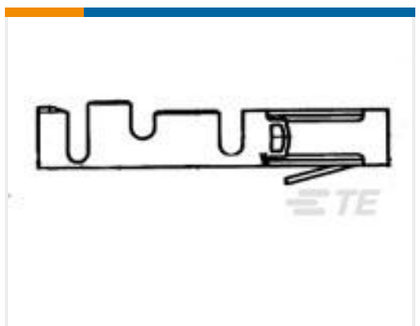

TE Part #87045-1
MOD IV RECP LP



TE Part #1362990-1
9631 7179 10,OSX, 75 OHM



TE Part #1SNA113544R1200
PC5-10



TE Part #1SNA114522R0500
SCFT2



TE Part #1SNA190008R0700
D120/42.AF

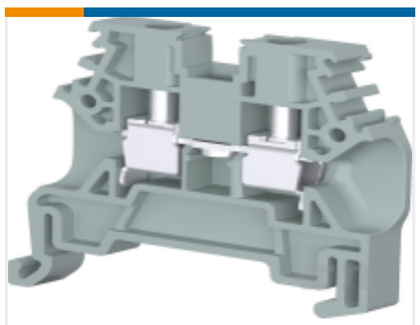

TE Part #1SNL505010R0000
C2.5/5

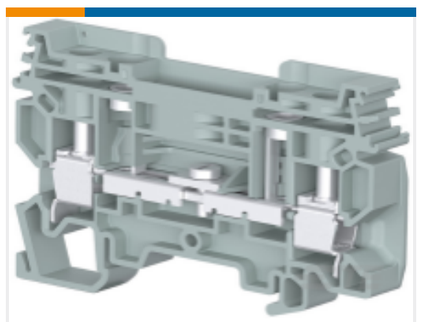

TE Part #1SNL508310R0000
C6/8.ST1

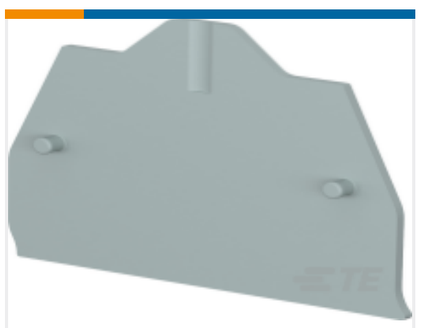

TE Part #1SNL900100R0000
EP5-6



TE Part #T3100000016-000
REMOV-HEEE

Documents

Product Drawings

0250=HD NYLON END SECT (PKGD)

English

Datasheets & Catalog Pages

BUCHANAN NEMA Terminal Blocks - Catalogue

English