2143432-1 ✔ ACTIVE

QSFP/QSFP+

TE Internal #: 2143432-1

QSFP/QSFP+, QSFP/QSFP+/zQSFP+, Cage Assembly, Port Matrix Configuration 1 x 1, Internal/External EMI Springs, Included Lightpipe, Standard, 1 Port

View on TE.com >

Connectors > Pluggable IO Connectors & Cages > QSFP/QSFP+/zQSFP+

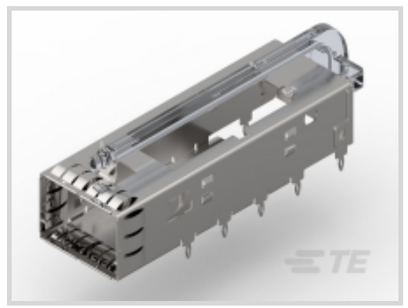

Pluggable I/O Product Type: **Cage Assembly**

Port Matrix Configuration: **1 x 1**

EMI Containment Feature Type: **Internal/External EMI Springs**

Included Lightpipe: **Yes**

Enhancements: **Standard**

Features

Product Type Features

Form Factor	QSFP+
Cage Type	Single
Pluggable I/O Product Type	Cage Assembly
Connector System	Cable-to-Board
Sealable	No
Connector & Contact Terminates To	Printed Circuit Board

Configuration Features

Port Matrix Configuration	1 x 1
Number of Ports	1
Lightpipe Configuration	Single Round
Number of Rear EONs per Port Column	2

Contact Features

PCB Contact Termination Area Plating Material	Tin

Termination Features

Termination Method to Printed Circuit Board	Through Hole - Press-Fit

Mechanical Attachment

Connector Mounting Type	Board Mount

Housing Features

Cage Material	Nickel Silver

Dimensions

Tail Length	2.2 mm[.086 in]
PCB Thickness (Recommended)	1.45 mm[.057 in]

Usage Conditions

Operating Temperature Range	-55 – 105 °C[-67 – 221 °F]

Operation/Application

Heat Sink Compatible	Yes
For Use With Pluggable I/O Products	QSFP Cable Assembly, QSFP MSA Compatible Transceiver
Pluggable I/O Applications	SFP+ Stacked Belly-to-Belly
Circuit Application	Signal

Industry Standards

UL Flammability Rating	UL 94V-0

Packaging Features

Packaging Method	Box & Tray

Other

EMI Containment Feature Type	Internal/External EMI Springs
Included Lightpipe	Yes
Enhancements	Standard

Product Compliance

For compliance documentation, visit the product page on TE.com>

EU RoHS Directive 2011/65/EU	Compliant
EU ELV Directive 2000/53/EC	Compliant
China RoHS 2 Directive MIIT Order No 32, 2016	No Restricted Materials Above Threshold
EU REACH Regulation (EC) No. 1907/2006	Current ECHA Candidate List: JAN 2021 (211) Candidate List Declared Against: DEC 2013 (151) SVHC > Threshold: Not Yet Reviewed
Halogen Content	Not Low Halogen - contains Br or Cl > 900

	ppm.
Solder Process Capability	Not reviewed for solder process capability

Product Compliance Disclaimer

This information is provided based on reasonable inquiry of our suppliers and represents our current actual knowledge based on the information they provided. This information is subject to change. The part numbers that TE has identified as EU RoHS compliant have a maximum concentration of 0.1% by weight in homogenous materials for lead, hexavalent chromium, mercury, PBB, PBDE, DBP, BBP, DEHP, DIBP, and 0.01% for cadmium, or qualify for an exemption to these limits as defined in the Annexes of Directive 2011/65/EU (RoHS2). Finished electrical and electronic equipment products will be CE marked as required by Directive 2011/65/EU. Components may not be CE marked.Additionally, the part numbers that TE has identified as EU ELV compliant have a maximum concentration of 0.1% by weight in homogenous materials for lead, hexavalent chromium, and mercury, and 0.01% for cadmium, or qualify for an exemption to these limits as defined in the Annexes of Directive 2000/53/EC (ELV). Regarding the REACH Regulations, TE's information on SVHC in articles for this part number is still based on the European Chemical Agency (ECHA) 'Guidance on requirements for substances in articles'(Version: 2, April 2011), applying the 0.1% weight on weight concentration threshold at the finished product level. TE is aware of the European Court of Justice ruling of September 10th, 2015 also known as O5A (Once An Article Always An Article) stating that, in case of 'complex object', the threshold for a SVHC must be applied to both the product as a whole and simultaneously to each of the articles forming part of its composition. TE has evaluated this ruling based on the new ECHA "Guidance on requirements for substances in articles" (June 2017, version 4.0) and will be updating its statements accordingly.

Compatible Parts

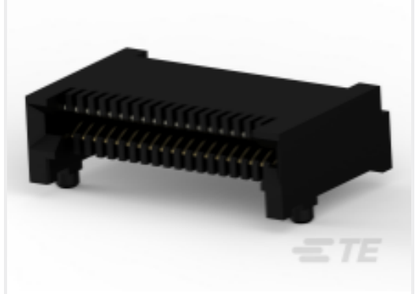

TE Part # 2110819-1
QSFP+ Enh EVERCLEAR PT Conn

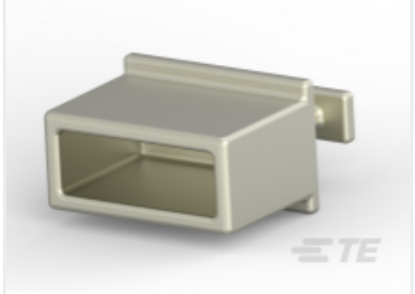

TE Part # 1888810-2
EMI/Dust Cover,XFP And QSFP



TE Part # CAT-C11-H50111
QSFP-Four SFP+ I/O Cable Assembly 30 AWG



TE Part # CAT-C11-H501114
QSFP to QSFP I/O Cable Assembly: 30 AWG



TE Part # 2821309-4
QSFP TO [2]QSFP, 28G, 3 METER, 30AWG



TE Part # 2821309-3
QSFP TO [2]QSFP, 28G, 3 METER, 26AWG



TE Part # 2202165-5
QSFP TO QSFP, 26AWG, FDR, 5.0 METER



TE Part # 2821309-2
QSFP TO [2]QSFP, 28G, 2 METER, 30AWG

Also in the Series | QSFP/QSFP+

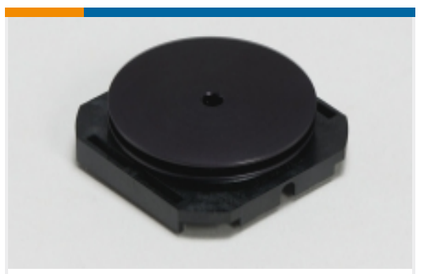

Heat Sinks(1)



Pluggable I/O Cable Assemblies(33)

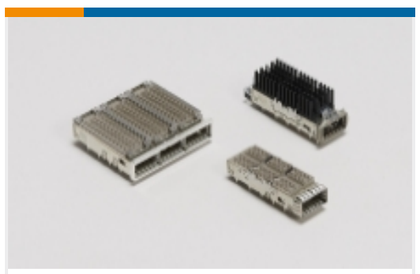

QSFP/QSFP+/zQSFP+(168)

Customers Also Bought



TE Part #53418-2
PIDG RADIATION REST/150 C RINGS /SPADES



TE Part #228626-1
PLUG,RT ANGLE,SMA

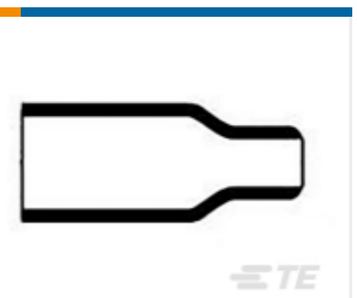

TE Part #813972-000
Heat Shrink Boots: Non Lipped, Straight

TE Part #1996628-1
COAX SOCKET,Sz8,RG179 HEX CRIMP

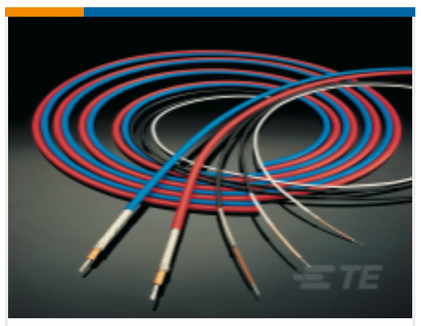

TE Part #490092-000
10600-22-9



TE Part #1617073-2
3SBC1762A2 = M39016/13-096L



TE Part #333951-000
55A1842-16-MST4-9CS2275



TE Part #118239-000
55A4832-20-MST3-9CS2275



TE Part #YDIV46E15-05PNC009
PLUG ASSY

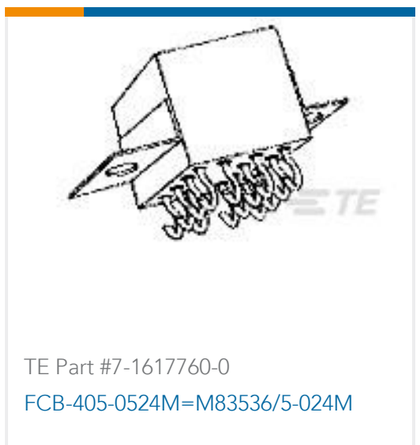

TE Part #7-1617760-0
FCB-405-0524M=M83536/5-024M

Documents

Product Drawings

QSFP Cage Assy w/ Light Pipe, TB

English

CAD Files

3D PDF

3D

Customer View Model

ENG_CVM_CVM_2143432-1_A.2d_dxf.zip

English

Customer View Model

ENG_CVM_CVM_2143432-1_A.3d_igs.zip

English

Customer View Model

ENG_CVM_CVM_2143432-1_A.3d_stp.zip

English

By downloading the CAD file I accept and agree to the **Terms and Conditions** of use.

Product Specifications

Application Specification

English