6-100525-9 ✔ ACTIVE

Z-PACK | Z-PACK 2mm HM

TE Internal #: 6-100525-9

Z-PACK 2mm HM, Backplane Coding Keys, Plug, Coding Key Number 4678

View on TE.com >

Connectors > PCB Connectors > Backplane Connectors > Backplane Coding Keys

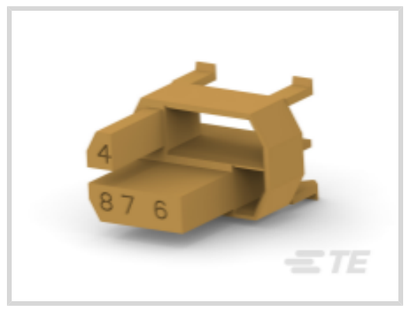






Applied to Connector Style: **Plug**

Coding Key Number: **4678**

Features

Body Features

Coding Key Color	Ocher Yellow

Usage Conditions

Compatible With Backplane Connector Type	Type A, Type D, Type L, Type M
Applied to Connector Style	Plug

Packaging Features

Packaging Quantity	500
Packaging Method	Bag

Other

Coding Key Number	4678

Product Compliance

For compliance documentation, visit the product page on TE.com>

EU RoHS Directive 2011/65/EU	Compliant
EU ELV Directive 2000/53/EC	Compliant
China RoHS 2 Directive MIIT Order No 32, 2016	No Restricted Materials Above Threshold
EU REACH Regulation (EC) No. 1907/2006	Current ECHA Candidate List: JAN 2021 (211)

	Candidate List Declared Against: JAN 2021 (211) Does not contain REACH SVHC
Halogen Content	Low Halogen - Br, Cl, F, I < 900 ppm per homogenous material. Also BFR/CFR/PVC Free
Solder Process Capability	Not applicable for solder process capability

Product Compliance Disclaimer

This information is provided based on reasonable inquiry of our suppliers and represents our current actual knowledge based on the information they provided. This information is subject to change. The part numbers that TE has identified as EU RoHS compliant have a maximum concentration of 0.1% by weight in homogenous materials for lead, hexavalent chromium, mercury, PBB, PBDE, DBP, BBP, DEHP, DIBP, and 0.01% for cadmium, or qualify for an exemption to these limits as defined in the Annexes of Directive 2011/65/EU (RoHS2). Finished electrical and electronic equipment products will be CE marked as required by Directive 2011/65/EU. Components may not be CE marked. Additionally, the part numbers that TE has identified as EU ELV compliant have a maximum concentration of 0.1% by weight in homogenous materials for lead, hexavalent chromium, and mercury, and 0.01% for cadmium, or qualify for an exemption to these limits as defined in the Annexes of Directive 2000/53/EC (ELV). Regarding the REACH Regulation, the information TE provides on SVHC in articles for this part number is based on the latest European Chemicals Agency (ECHA) 'Guidance on requirements for substances in articles' posted at this URL: https://echa.europa.eu/guidance-documents/guidance-on-reach

Compatible Parts

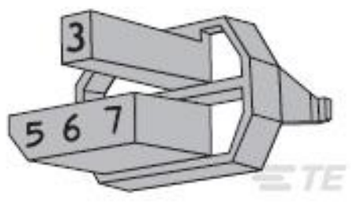

TE Part # 6-100526-9
Z-PACK F.CODING KEY

Also in the Series | Z-PACK 2mm HM



Backplane Coding Keys(60)

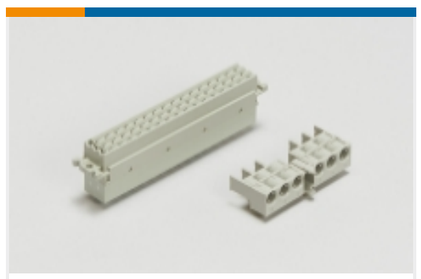

Backplane Connector Housings(4)



Backplane Guide Hardware(37)

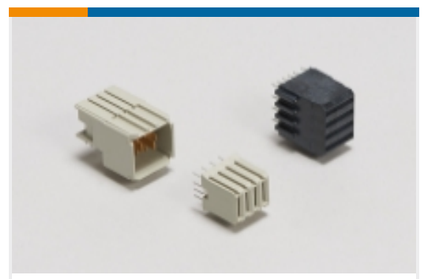

Backplane Power Connectors(7)



Board-to-Board Connector Contacts(5)

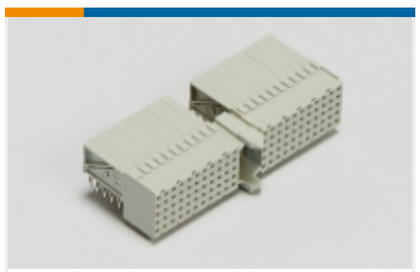

Hard Metric Backplane Connectors (272)



Insertion & Extraction Tools(2)

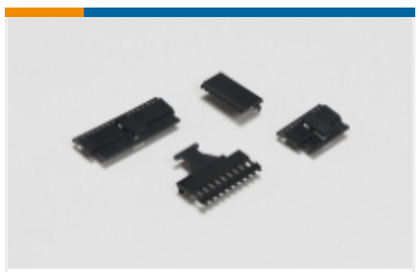

PCB Connector Covers(4)



PCB Connector Shrouds(39)



PCB Ferrules & Shields(19)

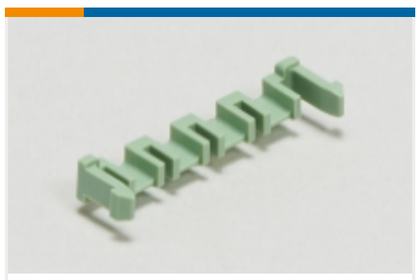

PCB Latches, Locks & Retainers(1)



Rectangular Power Connectors(87)

Customers Also Bought



TE Part #165616-2
PIDG FASTON RECPT QUICK DISCONNECTS

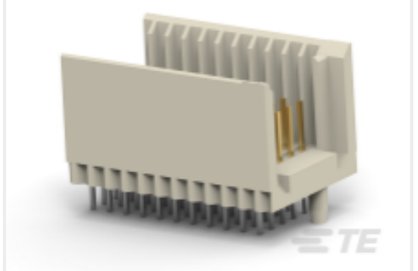

TE Part #188834-1
Hard Metric Male Connector: Traditional Backplane, Mezzanine, 2mm

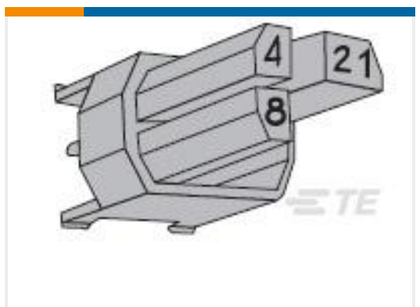

TE Part #2-100525-0
Z-PACK M.CODING KEY



TE Part #1648382-1
708-68-01109=CONTACT,SKT,#20

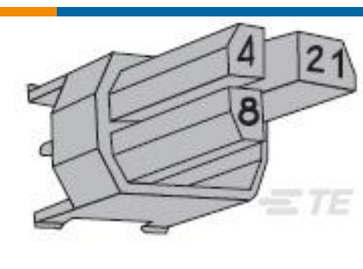

TE Part #100525-9
Z-PACK M.CODING KEY



TE Part #1623471-1
CRG1206 1% 27K

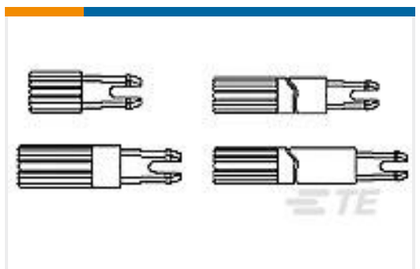

TE Part #1625895-4
6X60 SHAFT

TE Part #YDTS20W13-08ANV001
D38999: Square Flange, 13-08 insert

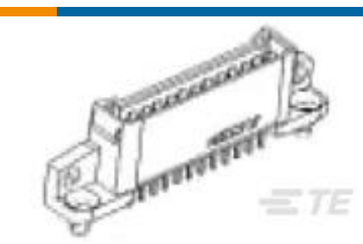

TE Part #1-765206-9
VERT. HEADER ASSY. .100CL



TE Part #183157-000
4010-10-130608

Documents

Product Drawings

Z-PACK M.CODING KEY

English

CAD Files

3D PDF

3D

Customer View Model

ENG_CVM_CVM_6-100525-9_C.2d_dxf.zip

English

Customer View Model

ENG_CVM_CVM_6-100525-9_C.3d_igs.zip

English

Customer View Model

ENG_CVM_CVM_6-100525-9_C.3d_stp.zip

English

By downloading the CAD file I accept and agree to the **Terms and Conditions** of use.

Product Specifications

Application Specification

English