1452389-1 ✔ ACTIVE

AMP | MCON 1.2mm, MCON Interconnection System

TE Internal #: 1452389-1

MCON Interconnection System, Automotive Connector Caps & Covers, Cover Assembly, Cable Exit Angle 90° (Right Angle), With, Black, PBT GF

View on TE.com >

Connectors > Automotive Connectors > Connector Accessories > Connector Caps & Covers



Protection & Strain Relief Accessory Type: **Cover Assembly**

Cable Exit Angle: **90° (Right Angle)**

Strain Relief: **With**

Primary Product Color: **Black**

Primary Product Material: **PBT GF**

Features

Product Type Features

Protection & Strain Relief Accessory Type	Cover Assembly
Connector System	Wire-to-Board, Wire-to-Device

Configuration Features

Number of Positions	96

Body Features

Cable Exit Angle	90° (Right Angle)
Primary Product Color	Black
Primary Product Material	PBT GF

Mechanical Attachment

Strain Relief	With

Usage Conditions

Operating Temperature (Max)	70 °C, 75 °C, 80 °C, 85 °C, 90 °C, 100 °C, 105 °C, 110 °C, 120 °C, 125 °C, 130 °C, 140 °C[158 °F][167 °F][176 °F][185 °F][194 °F][212 °F][221 °F][230 °F][248 °F][257 °F][266 °F][284 °F]
Operating Temperature Range	-40 – 140 °C[-40 – 284 °F]

Packaging Features

Packaging Quantity	100

Packaging Method	Box

Product Compliance

For compliance documentation, visit the product page on TE.com>

EU RoHS Directive 2011/65/EU	Compliant
EU ELV Directive 2000/53/EC	Compliant
China RoHS 2 Directive MIIT Order No 32, 2016	No Restricted Materials Above Threshold
EU REACH Regulation (EC) No. 1907/2006	Current ECHA Candidate List: JAN 2021 (211) Candidate List Declared Against: JAN 2021 (211) Does not contain REACH SVHC
Halogen Content	Low Halogen - Br, Cl, F, I < 900 ppm per homogenous material. Also BFR/CFR/PVC Free
Solder Process Capability	Not applicable for solder process capability

Product Compliance Disclaimer

This information is provided based on reasonable inquiry of our suppliers and represents our current actual knowledge based on the information they provided. This information is subject to change. The part numbers that TE has identified as EU RoHS compliant have a maximum concentration of 0.1% by weight in homogenous materials for lead, hexavalent chromium, mercury, PBB, PBDE, DBP, BBP, DEHP, DIBP, and 0.01% for cadmium, or qualify for an exemption to these limits as defined in the Annexes of Directive 2011/65/EU (RoHS2). Finished electrical and electronic equipment products will be CE marked as required by Directive 2011/65/EU. Components may not be CE marked. Additionally, the part numbers that TE has identified as EU ELV compliant have a maximum concentration of 0.1% by weight in homogenous materials for lead, hexavalent chromium, and mercury, and 0.01% for cadmium, or qualify for an exemption to these limits as defined in the Annexes of Directive 2000/53/EC (ELV). Regarding the REACH Regulation, the information TE provides on SVHC in articles for this part number is based on the latest European Chemicals Agency (ECHA) 'Guidance on requirements for substances in articles' posted at this URL: https://echa.europa.eu/guidance-documents/guidance-on-reach

Compatible Parts



TE Part # CAT-M4595-CH8172
MCON, CONNECTOR HOUSING



TE Part # 4-1564284-6
96POS,MCON-1.2 CB,REC HSG,ASSY



TE Part # 4-1564284-7
96POS,MCON-1.2 CB,REC HSG,ASSY



TE Part # 4-1564284-8
96POS,MCON-1.2 CB,REC HSG,ASSY

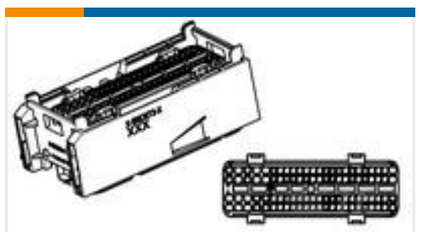

TE Part # 6-1564284-0
96POS,MCON-1.2 CB,REC HSG,ASSY



TE Part # 6-1564284-2
96POS,MCON-1.2 CB,REC HSG,ASSY



TE Part # 6-1564284-3
96POS,MCON-1.2 CB,REC HSG,ASSY



TE Part # 6-1564284-4
96POS,MCON-1.2 CB,REC HSG,ASSY



TE Part # 6-1564284-5
96POS,MCON-1.2 CB,REC HSG,ASSY

Also in the Series | MCON 1.2mm



Automotive Connector Caps & Covers (9)

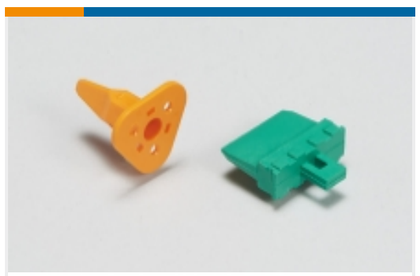

Automotive Connector Locks & Position Assurance(9)



Automotive Housings(5)



Automotive Seals & Cavity Plugs(1)



Automotive Terminals(11)



Insertion & Extraction Tools(5)



Other Automotive Connector Accessories(4)

Also in the Series | MCON Interconnection System

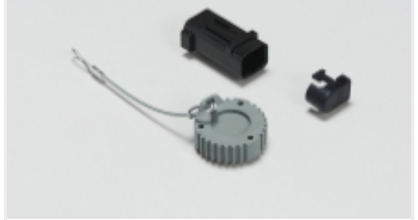

Automotive Connector Caps & Covers (24)

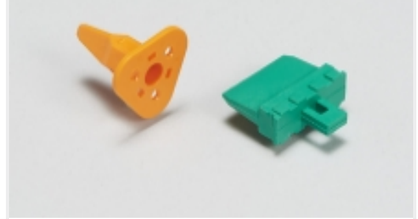

Automotive Connector Locks & Position Assurance(11)



Automotive Headers(1)



Automotive Housings(288)



Automotive Seals & Cavity Plugs(4)



Automotive Terminals(114)



Insertion & Extraction Tools(31)



Other Automotive Connector Accessories(6)

Customers Also Bought



TE Part #1326030-6
1.5/2.8 CONNECTOR SYSTEM, RECPT AND TAB



TE Part #1452388-1
2 LOCKING DEVI1.2



TE Part #1452416-1
58POS CONNECTOR COVER 180 ASSY



TE Part #1452408-2
SECONDARY LOCK FOR 58 POS CONN



TE Part #1452388-2
SECONDARY LOCK FOR 96 POS CONN



TE Part #1-1452424-2
BLIND PLUG FOR MCON 1.2 CB (1.



TE Part #1-1452424-1
BLIND PLUG FOR MCON 1.2 CB (0,

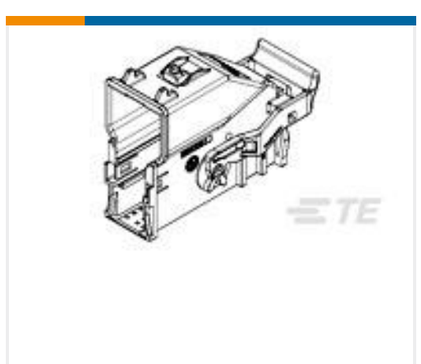

TE Part #1-1924337-3
Shield Assy, 54 POSN, 0.64mm, 20 DEG BLK



TE Part #1-2208021-1
22POS,0.64 GENER. Y,REC HSG,ASSY



TE Part #965412-1
MQS GRIFFSCHALE 6P

Documents

Product Drawings

COVER ASSY 96 POS.

English

CAD Files

3D PDF

3D

Customer View Model

ENG_CVM_CVM_1452389-1_D.2d_dxf.zip

English

Customer View Model

ENG_CVM_CVM_1452389-1_D.3d_igs.zip

English

Customer View Model

ENG_CVM_CVM_1452389-1_D.3d_stp.zip

English

By downloading the CAD file I accept and agree to the Terms and Conditions of use.

Product Specifications

Application Specification

English

Product Environmental Compliance

Product Compliance

English

Product Compliance

English