1410338-6 ✔ ACTIVE

TE Internal #: 1410338-6

Backplane Guide Hardware, Guide Socket Module, 1 Position,
Operating Temperature Range -55 – 105 °C [-67 – 221 °F]

View on TE.com >

Connectors > PCB Connectors > Backplane Connectors > Backplane Guide Hardware

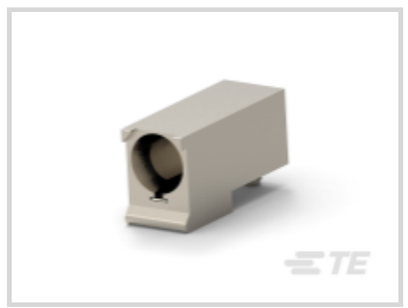



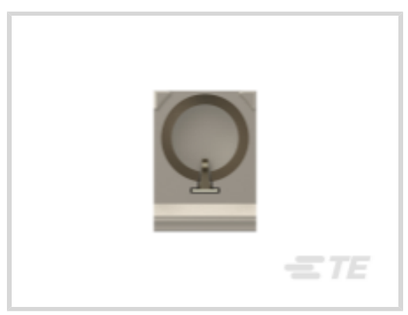

Backplane Guide Hardware Type: **Guide Socket Module**

Backplane Guide Location: **Front Board**

Number of Positions: **1**

Operating Temperature Range: **-55 – 105 °C [-67 – 221 °F]**

Features

Product Type Features

Backplane Guide Hardware Type	Guide Socket Module

Configuration Features

PCB Mount Orientation	Right Angle
Backplane Guide Location	Front Board
Number of Positions	1

Mechanical Attachment

Mating Alignment Type	Polarization
Mating Alignment	With

Dimensions

Product Length	22.75 mm[.895 in]

Usage Conditions

Operating Temperature Range	-55 – 105 °C[-67 – 221 °F]

Product Compliance

For compliance documentation, visit the product page on TE.com>

EU RoHS Directive 2011/65/EU	Compliant
EU ELV Directive 2000/53/EC	Compliant
China RoHS 2 Directive MIIT Order No 32, 2016	No Restricted Materials Above Threshold
EU REACH Regulation (EC) No. 1907/2006	Current ECHA Candidate List: JAN 2021 (211) Candidate List Declared Against: JAN 2021 (211) Does not contain REACH SVHC
Halogen Content	Low Halogen - Br, Cl, F, I < 900 ppm per homogenous material. Also BFR/CFR/PVC Free
Solder Process Capability	Not reviewed for solder process capability

Product Compliance Disclaimer

This information is provided based on reasonable inquiry of our suppliers and represents our current actual knowledge based on the information they provided. This information is subject to change. The part numbers that TE has identified as EU RoHS compliant have a maximum concentration of 0.1% by weight in homogenous materials for lead, hexavalent chromium, mercury, PBB, PBDE, DBP, BBP, DEHP, DIBP, and 0.01% for cadmium, or qualify for an exemption to these limits as defined in the Annexes of Directive 2011/65/EU (RoHS2). Finished electrical and electronic equipment products will be CE marked as required by Directive 2011/65/EU. Components may not be CE marked. Additionally, the part numbers that TE has identified as EU ELV compliant have a maximum concentration of 0.1% by weight in homogenous materials for lead, hexavalent chromium, and mercury, and 0.01% for cadmium, or qualify for an exemption to these limits as defined in the Annexes of Directive 2000/53/EC (ELV). Regarding the REACH Regulation, the information TE provides on SVHC in articles for this part number is based on the latest European Chemicals Agency (ECHA) 'Guidance on requirements for substances in articles' posted at this URL: https://echa.europa.eu/guidance-documents/guidance-on-reach

Compatible Parts

TE Part # 1766876-1
PLATED CONTACT,SKT BOD

Customers Also Bought



TE Part #1-338084-3
RJ22 Connectors



TE Part #1735446-4
AMP HPI 2.0MM HEADERS



TE Part #1445336-3
LOOSE PC CONTACT 30 AU PLATED

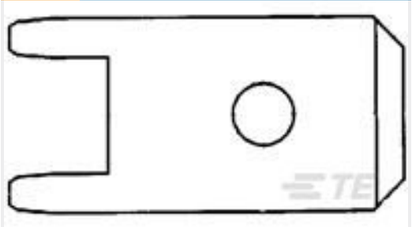

TE Part #170267-1
250 FASTON,PCB TAB,TCBR



TE Part #106276-4
32P.IEC-C/2 M.CONN.



TE Part #1123721-2
ECONOMY POWER CONN REC CONT



TE Part #1-5316562-1
.6FHP08H,160,S,GIG,08/Sn,ST,NS



TE Part #1622886-2
CRG0603 1% 22K 10K RL



TE Part #YDTS26Z23-35PBV001
D38999: Straight Plug, 23-35 Insert

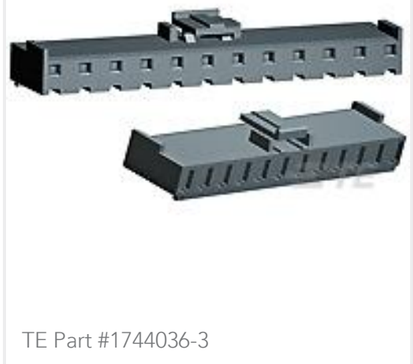

TE Part #1744036-3
03P ECONOMY POWER .200 CL HSG

Documents

Product Drawings

MULTIGIG RT 9MM GUIDE/ESD

English

CAD Files

3D PDF

3D

Customer View Model

ENG_CVM_CVM_1410338-6_A.2d_dxf.zip

English

Customer View Model

ENG_CVM_CVM_1410338-6_A.3d_igs.zip

English

Customer View Model

ENG_CVM_CVM_1410338-6_A.3d_stp.zip

English

By downloading the CAD file I accept and agree to the Terms and Conditions of use.

Datasheets & Catalog Pages

2_PIECE_POWER_CONNECTORS_qrg_4-1773458-1

English

Product Specifications

Product Specification

English

Product Environmental Compliance

MD_1410338-6_06012018236_dmtec

English

MD_1410338-6_06012018236_dmtec

English